CBM70 Series 70W High Density AC-DC

Features

- Universal Input Range 90~264V_{ac}
- Efficiency up to 89.5%
- Meets Class I
- No Load Input Power Consumption<150mW
- Safety IEC/EN/UL 62368-1 Approval Ed 3.0
- Operating Altitude 5000m
- Continuous Short Circuit Protection
- Over Temperature Protection
- Over Voltage Protection
- 17mm Ultra Low Profile Half Brick Package
- Full Load with Baseplate Cooled and No Fan Required
- Built-in EN 55032 Class B Filter
- All in One Without External Components
- Wide Operating Temperature Range

MODEL NUMBER	OUTPUT VOLTAGE	OUTPUT CURRENT	RIPPLE& NOISE NOTE1	VOLTAGE ACCURACY NOTE2	LINE REGULATION NOTE3	LOAD REGULATION NOTE4	%EFF. (Typ.) NOTE5
CBM70S120	12 V	5.83 A	120 mV	±1.0%	±0.5%	±1%	88.0%
CBM70S240	24 V	2.92 A	240 mV	±1.0%	±0.5%	±1%	88.5%
CBM70S360	36 V	1.94 A	360 mV	±1.0%	±0.5%	±1%	89.0%
CBM70S480	48 V	1.46 A	480 mV	±1.0%	±0.5%	±1%	89.5%

Note:

1. Add a 0.1uF ceramic capacitor and a 10uF E.L. capacitor to output for ripple & noise measuring @20MHz BW.
2. Voltage accuracy is set at 60% load.
3. Line regulation is measured from 90V_{ac} to 264V_{ac} with full load.
4. Load regulation is measured from 60%±40% rated load.
5. Typical efficiency at 230V_{ac} and full load at 25℃.
6. Power dissipation (Pd): Pd =Pi-Po=Po(1-η)/η.

PART NUMBER

Series	Number of Outputs	Nominal Output Voltage
CBM70	X	XXX
CBM70	S：Single	120：12V 240：24V 360：36V 480：48V

Part Number Example:

CBM70S120:70W, Single 12V_{dc} Output

Email: sales@powersolve.com.tw Web: www.powersolve.com.tw

TECHNICAL SPECIFICATIONS

(All specifications are typical at nominal input, full load at 25°C unless otherwise noted.)

ABSOLUTE MAXIMUM RATINGS

PARAMETER	NOTES and CONDITIONS	Device	Min.	Typ.	Max.	Units
Input Voltage	Safety approvals only to the AC input	All	90 127		264 370	V_{ac} V_{dc}
Operating Case Temperature	At the center of base plate	All	-40		85	℃
Storage Temperature		All	-40		85	℃
Input/Output Isolation Voltage	1 minute	All	3000			V_{ac}
Operating Altitude		All			5000	m

INPUT CHARACTERISTICS

PARAMETER	NOTES and CONDITIONS	Device	Min.	Typ.	Max.	Units
Operating Voltage Range		All	100		240	V_{ac}
Input Frequency Range		All	47		63	Hz
Maximum Input Current	100% Load, V_{in}=100V_{ac}	All			1.5	A
Leakage Current		All			3.5	mA
Inrush Current	V_{in}=240V_{ac}, Cold start at 25℃	All			100	A
Under Voltage Protection		All	63	70	77	V_{ac}

OUTPUT CHARACTERISTICS

PARAMETER	NOTES and CONDITIONS	Device	Min.	Typ.	Max.	Units
Output Voltage Set Point	V_{in}=Nominal V_{in}, I_o=60% I_o max., T_c=25℃	CBM70S120 CBM70S240 CBM70S360 CBM70S480	11.88 23.76 35.64 47.52	12 24 36 48	12.12 24.24 36.36 48.48	V_{dc}
Operating Output Current Range	V_{in}=90V_{ac}~264V_{ac}, See Derating Curve	CBM70S120 CBM70S240 CBM70S360 CBM70S480			5.83 2.92 1.94 1.46	A
Holdup Time	V_{in}=115V_{ac}	All		6		ms
Output Voltage Regulation						
Load Regulation	60% Load to100% load & 60% load to 20% load	All			±1.0	%
Line Regulation	V_{in}=High line to low line	All			±0.5	%
Output Voltage Trim Range	P_o≦max. rated power, I_o≦I_o_max.	All	-10		+10	%
Over Current Protection	Hiccup mode, auto recovery	All	110		150	%
Short Circuit Protection	Auto recovery	All				
Over Temperature Protection (Auto Recovery)	shutdown case temperature (without heatsink test)	All		100		℃
	Recovery case temperature (without heatsink test)			95		
Over Voltage Protection	Auto recovery	CBM70S120 CBM70S240 CBM70S360 CBM70S480		14 28 42 56	16 35 50 63	V_{dc}
Output Ripple and Noise	1. Add a 0.1uF ceramic capacitor and a 10uF aluminum electrolytic capacitor to output 2. Oscilloscope is 20MHz band width 3. Ambient temperature=25℃	CBM70S120 CBM70S240 CBM70S360 CBM70S480			120 240 360 480	mV

Email: sales@powersolve.com.tw Web: www.powersolve.com.tw

PARAMETER	NOTES and CONDITIONS	Device	Min.	Typ.	Max.	Units
Load Capacitance	1. Input voltage is 115V_{ac} and 230V_{ac} 2. Output is max. Load 3. Ambient temperature=25℃	CBM70S120 CBM70S240 CBM70S360 CBM70S480			5830 2920 1940 1460	uF

EFFICIENCY

PARAMETER	NOTES and CONDITIONS	Device	Min.	Typ.	Max.	Units
Efficiency	1. Input voltage is 230V_{ac} 2. Output is rated load 3. Ambient temperature=25℃	CBM70S120 CBM70S240 CBM70S360 CBM70S480		88.0 88.5 89.0 89.5		%

ISOLATION CHARACTERISTICS

PARAMETER	NOTES and CONDITIONS	Device	Min.	Typ.	Max.	Units
Input to Output	1 Minute (without dielectric breakdown)	All			3000	V_{ac}
Input to Earth (Ground)	1 Minute (without dielectric breakdown)	All			1800	V_{ac}
Output to Earth (Ground)	1 Minute (without dielectric breakdown)	All			500	V_{ac}
Isolation Resistance	Input to output	All	100			MΩ

FEATURE CHARACTERISTICS

PARAMETER	NOTES and CONDITIONS	Device	Min.	Typ.	Max.	Units
Switching Frequency		All		65		kHz

GENERAL SPECIFICATIONS

PARAMETER	NOTES and CONDITIONS	Device	Min.	Typ.	Max.	Units
MTBF	I_o=100%; T_a=25℃ per MIL-HDBK-217F I_o=100%; T_a=25℃ per Telcordia SR332	All	550 3000			k hours
Humidity	Nom-condensing	All			93	% RH
Shock	Meets MIL-STD-810F Table 516.5,TABLE 516.5-I 10ms, each axis 3 times (±X、±Y、±Z axis)	All		75		g
Vibration	Meets MIL-STD-810F Table 514.5C-VIII,15~2000Hz, X、Y、Z axis, 1 hr(each axis), total 3 hrs.	All		4		g
Weight		All		135		grams
Dimensions		All	2.40x2.28x0.67 Inches (61.0x57.9x17.0mm)			
Case Material	Plastic DAP UL 94V-0					
Base Plate Material	Aluminum					
Potting Material	UL 94V-0					
Safety	Class I, IEC/EN/UL 62368-1					Ed 3.0
EMC Emission	EN 55032, EN 61204-3, EN 61000-6-3, EN 61000-6-4, 47 CFR FCC Part 15 Subpart B, EN 61000-3-2, EN 61000-3-3					Class B
Conducted Disturbance	EN 55032, EN 61204-3, EN 61000-6-3, EN 61000-6-4, 47 CFR FCC Part 15 Subpart B					Class B
Radiated Disturbance	EN 55032, EN 61204-3, EN 61000-6-3, EN 61000-6-4, 47 CFR FCC Part 15 Subpart B					Class B
Harmonic Current Emissions	EN 61000-3-2					
Voltage Fluctuations & Flicker	EN 61000-3-3					
EMC Immunity	EN 55035, EN 61204-3, EN 61000-6-1, EN 61000-6-2					
Electrostatic Discharge (ESD)	IEC 61000-4-2, Level 3: Air Discharge: ±8kV, Contact Discharge: ±4kV					Criterion A
Radio-Frequency Electromagnetic Field	IEC 61000-4-3, Level 3: 80~1000MHz, 10V/m					Criterion A
Electrical Fast Transient (EFT)	IEC 61000-4-4, Level 3: ±2kV					Criterion A
Surge	IEC 61000-4-5, Level 3: L-N: ±1kV, L-E (Ground): ±2kV					Criterion A

Email: sales@powersolve.com.tw Web: www.powersolve.com.tw

Radio-Frequency Continuous Conducted	IEC 61000-4-6, Level 3: 0.15-80MHz, 10V	Criterion A
Power Frequency Magnetic Field	IEC 61000-4-8, Level 4: 50-60Hz, 30A/m	Criterion A
Voltage Dips	IEC 61000-4-11, Dip: 30% Reduction IEC 61000-4-11, Dip >95% Reduction	Criterion A
Voltage Interruptions	IEC 61000-4-11, >95% Reduction	Criterion B
Application Note Link		CBM70S Series App Notes

CHARACTERISTIC CURVE

Power Derating Curve

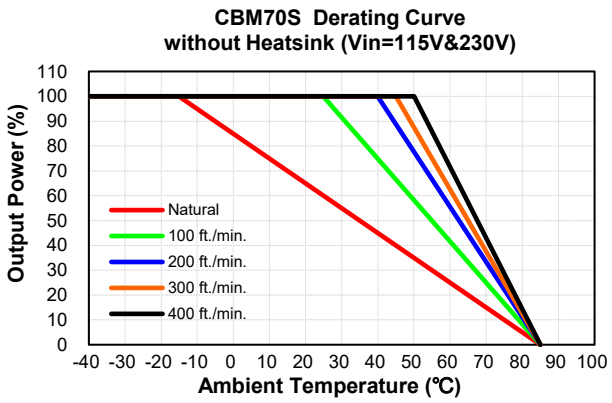

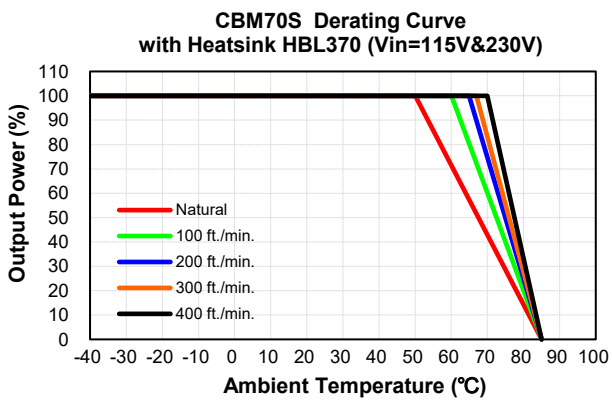

Performance Data

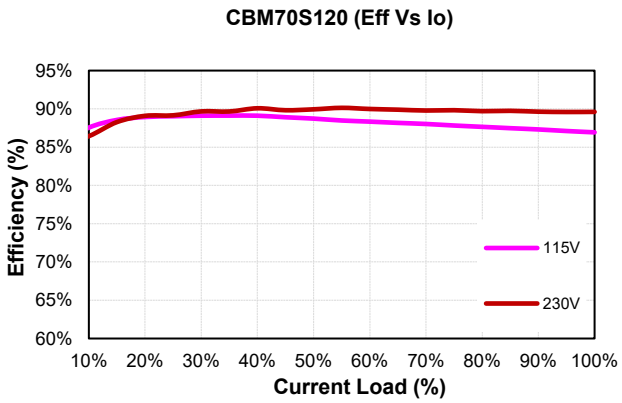

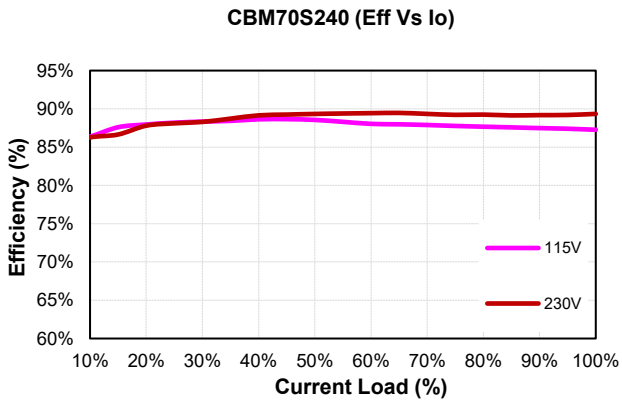

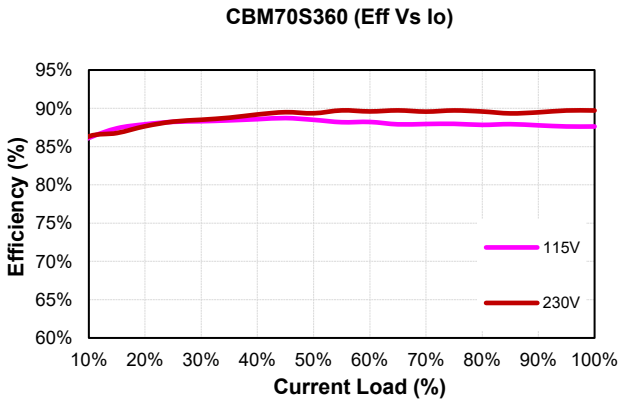

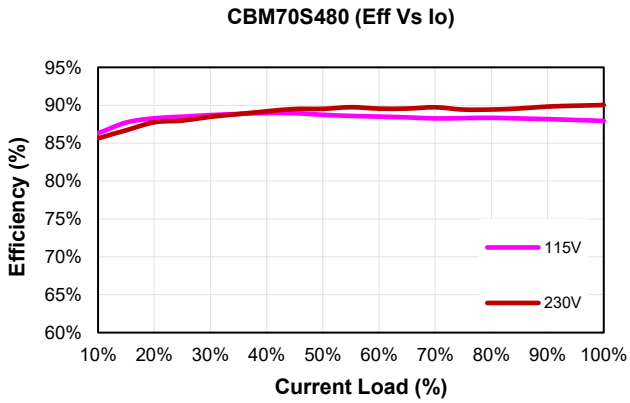

MECHANICAL SPECIFICATION

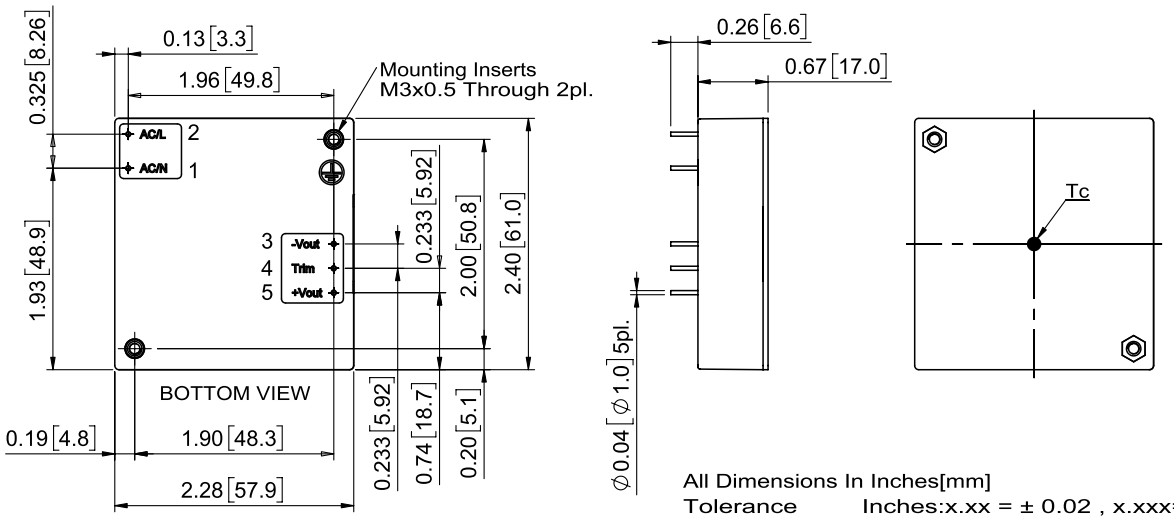

All Dimensions In Inches[mm]
Tolerance Inches:x.xx = ± 0.02 , x.xxx=± 0.010
Millimeters:x.x = ± 0.5, x.xx±0.25

Pin Connection

Pin	Function
1	ACN
2	ACL
3	-V Output
4	Trim
5	+V Output

Note:Pin Size is 0.04±0.004 Inch [1.0±0.1 mm]

AC-DC Switching Power Module
CBM70S SERIES
APPLICATION NOTE

Email: sales@powersolve.com.tw Web: www.powersolve.com.tw

Contents

1. Introduction 3
2. Pin Function Description 3
3. Electrical Block Diagram 3
4. Test Set-Up 4
5. Installation Instruction 4
6. Features and Functions 4
6.1 Over Current Protection 4
6.2 Over Voltage Protection 4
6.3 Over Temperature Protection 4
6.4 Output Voltage Adjustment 5
7. Input / Output Considerations 6
7.1 Output Ripple and Noise Measurement 6
8. Thermal Design 7
8.1 Operating Temperature Range 7
8.2 Convection Requirements for Cooling 7
8.3 Thermal Considerations 7
8.4 Power Derating 7
8.5 Half Brick Heat Sinks 9
9. Packing Information 10

Email: sales@powersolve.com.tw Web: www.powersolve.com.tw

CBM70S Series
Application Note V13

1. Introduction

This application note describes the features and functions of the CBM70S series, switching AC-DC power module. These are highly efficient, reliable, compact, high power density, single output AC/DC power modules. The module is fully protected against short circuit and over-voltage conditions. Our world class automated manufacturing methods, together with an extensive testing and qualification program, ensure that the CBM70S series power module is extremely reliable.

2. Pin Function Description

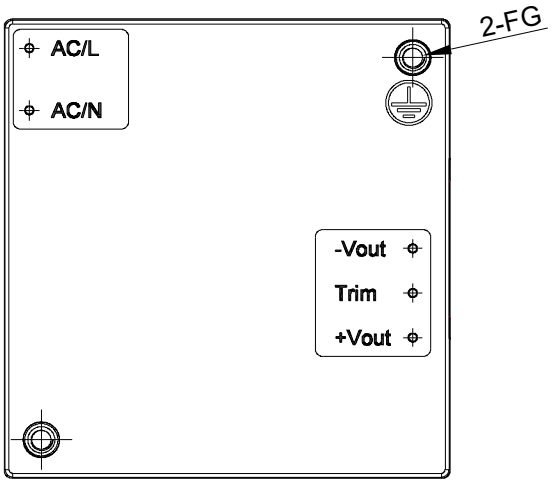

No	Label	Function	Description
1	AC/L	AC Line	Positive Supply Input
2	AC/N	AC Neutral	Negative Supply Input
3	+Vout	+V Output	Positive Power Output
4	Trim	Trim	External Output Voltage Adjustment
5	-Vout	-V Output	Negative Power Output
--	--	Mounting Insert	Mounting Insert (FG)

Note: Base plate can be connected to FG through M3 threaded mounting insert. Recommended torque 3Kgf-cm.

3. Electrical Block Diagram

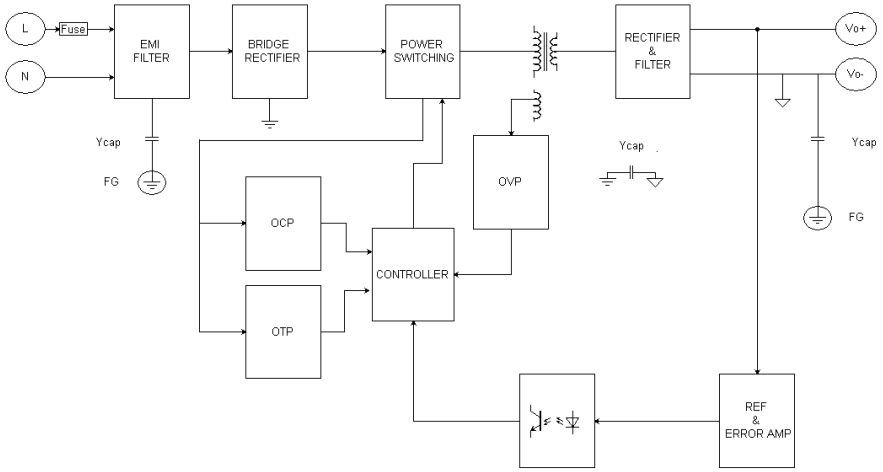

Email: sales@powersolve.com.tw Web: www.powersolve.com.tw

4. Test Set-Up

The basic test set-up to measure parameters such as efficiency and load regulation is shown in Figure 1. When testing the CBM70S series under any transient conditions, please ensure that the transient response of the source is sufficient to power the equipment under test. We can calculate:

- Efficiency
- Load regulation and line regulation

The value of efficiency is defined as:

$$\eta = \frac{V_o \times I_o}{V_{in} \times I_{in}} \times 100\%$$

Where:

V_o is output voltage,

I_o is output current,

V_{in} is input voltage,

I_{in} is input current.

The value of load regulation is defined as:

$$Load\ reg. = \frac{V_1 - V_2}{V_2} \times 100\%$$

Where:

V_1 is the output voltage at 60% load.

V_2 is the output voltage at 60%±40% load.

The value of line regulation is defined as:

$$Line\ reg. = \frac{V_{HL} - V_{LL}}{V_{LL}} \times 100\%$$

Where:

V_{HL} is the output voltage of maximum input voltage at full load.

V_{LL} is the output voltage of minimum input voltage at full load.

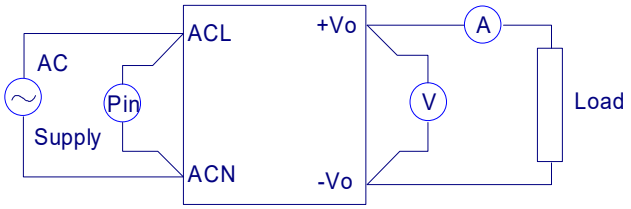

Figure 1. CBM70S Series Test Setup

5. Installation Instruction

The CBM70S mounting holes are 1.5mm. Please allow 4mm side clearance from the components and all side of the PCB and CASE. Allow 5mm clearance above the highest parts on the PCB and CASE.

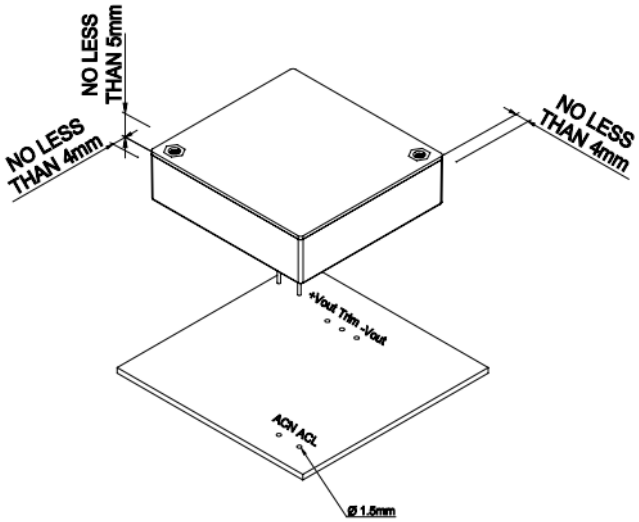

6. Features and Functions

6.1 Over Current Protection

All models have internal over current and continuous short circuit protection. The unit operates normally once the fault condition is removed. At the point of current limit inception, the converter will go into hiccup mode protection.

6.2 Over Voltage Protection

All different voltage models have a fully continuous over voltage protection. The power module will supply OVP.In the event of happen the OVP, the converter will shut down, the converter will go into hiccup mode protection.

6.3 Over Temperature Protection

These modules have an over temperature protection circuit to safeguard against thermal damage. Shutdown occurs with the maximum case reference temperature is exceeded. The module will restart when the case temperature falls below over temperature recovery threshold. Please measure case temperature of the center part of aluminum base plate.

Email: sales@powersolve.com.tw Web: www.powersolve.com.tw

6.4 Output Voltage Adjustment

Output may be externally trimmed (-10% to +10%) with a fixed resistor. Po≦max rated power, Io≦Io_max.

Trim up/down is extra features, changing the output voltage will cause some electrical properties to be substandard.

EX:

Output voltage ±1%,etc.

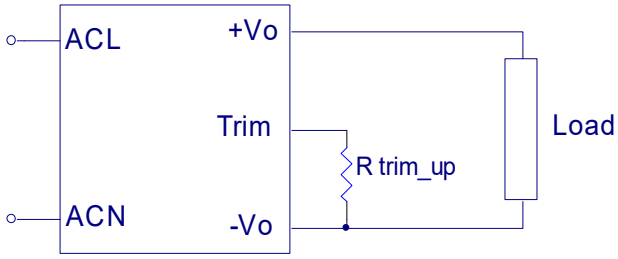

Trim-up Voltage Setup

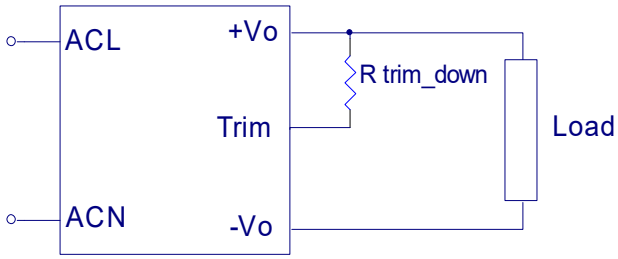

Trim-down Voltage Setup

The value of R_{trim_up} defined as:

$$R_{trim_up} = \left[\frac{(R3 \times Vr \times \frac{(R1+R2)}{R1})}{(Vout - \left(Vr \times \frac{(R1+R2)}{R1}\right) - \left(\frac{(Vr \times R3)}{R1}\right))}\right] - Rt(K\Omega)$$

Where:

R_{trim_up} is the external resistor in KΩ.

$V_{o,\ nom}$ is the nominal output voltage.

V_o is the desired output voltage.

R1, R2, R3, Rt and Vr are internal to the unit and are defined in Table 1.

Table 1 – Trim up and Trim down Resistor Values

Model Number	Output Voltage(V)	R1 (KΩ)	R2 (KΩ)	R3 (KΩ)	Rt (KΩ)	Vr (V)
CBM70S120	12.0	6.82	10	16	51	2.5
CBM70S240	24.0	6.82	22.6	36.33	130	2.5
CBM70S360	36.0	6.82	39	52.81	200	2.5
CBM70S480	48.0	6.82	56	68.51	240	2.5

For example, to trim-up the output voltage of 12V module (CBM70S120) by 10% to 13.2V, R_{trim_up} is calculated as follows:

R1=6.82KΩ, R2=10KΩ, R3=16KΩ, Rt=51KΩ, Vr=2.5V, Vo=13.2V, Vo, nom=12V

$$R_{trim_{up}} = \left[\frac{16 \times 2.5 \times ((6.82+10)/6.82)}{13.2 - \left(\frac{2.5 \times (6.82+10)}{6.82}\right) - \left(\frac{2.5 \times 16}{6.82}\right)}\right] - 51$$

$$= 33.3742\ (K\Omega)$$

Because R1, R2, R3 round off to the 2nd decimal place. R_{trim_up}& R_{trim_down} have error value.

The typical value of R_{trim_up}

Trim up (%)	12V	24V	36V	48V
	R_{trim_up} (KΩ)			
1%	1087.46	2831.31	4318.89	4595.59
2%	426.42	922.50	1394.74	1717.02
3%	251.04	509.98	768.22	986.75
4%	169.90	329.77	495.12	653.38
5%	123.12	228.75	342.19	462.48
6%	92.69	164.13	244.42	338.80
7%	71.31	119.23	176.52	252.16
8%	55.47	86.23	126.62	188.07
9%	43.27	60.94	88.40	138.75
10%	33.57	40.95	58.18	99.63

The value of R_{trim_down} defined as:

$$R_{trim_{down}} = \left[\frac{(Vout - Vr \times \frac{R1+R2}{R1}) \times R3}{((\frac{Vr \times R3}{R1}) - \left(Vout - Vr \times \frac{(R1+R2)}{R1}\right))}\right] - Rt(K\Omega)$$

Where:

R_{trim_down} is the external resistor in KΩ.

$V_{o,\ nom}$ is the nominal output voltage.

V_o is the desired output voltage.

R1, R2, R3, Rt and Vr are internal to the unit and are defined in Table 1.

For example: to trim-down the output voltage of 12V module (CBM70S120) by 10% to 10.8V, R_{trim_down} is calculated as follows:

R1=6.82KΩ, R2=10KΩ, R3=16KΩ, Rt=51KΩ, Vr=2.5V, Vo=10.8V, Vo, nom=12V

$$R_{trim_{down}} = \left(10.8 - 2.5 * \frac{6.82+10}{6.82}\right) * 16/(2.5 * \frac{16}{6.82} - \left(10.8 - 2.5 * \frac{6.82+10}{6.82}\right)) - 51$$

$$= 9.24\ (K\Omega)$$

Email: sales@powersolve.com.tw Web: www.powersolve.com.tw

The typical value of R_{trim_down}

Trim down (%)	12V	24V	36V	48V
	R_{trim_down} (KΩ)			
1%	545.17	1225.67	1699.95	2407.42
2%	276.41	657.18	904.41	1236.83
3%	171.64	418.39	569.43	771.39
4%	115.86	286.95	384.85	521.42
5%	81.21	203.76	267.95	365.42
6%	57.60	146.37	187.27	258.79
7%	40.48	104.39	128.23	181.29
8%	27.50	72.34	83.16	122.42
9%	17.31	47.08	47.63	76.18
10%	9.11	26.66	18.89	38.91

7. Input / Output Considerations

7.1 Output Ripple and Noise Measurement

The test set-up for noise and ripple measurements is shown in Figure 2 Measured method:

Add a C2=0.1uF ceramic capacitor and a C1=10uF electrolytic capacitor to output at 20 MHz bandwidth.

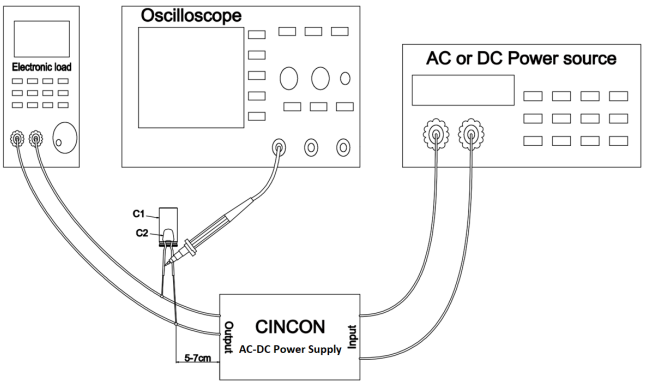

Figure 2. Output Voltage Ripple and Noise Measurement Set-Up

8. Thermal Design

8.1 Operating Temperature Range

The highly efficient design of the CBM70S series power modules has resulted in their ability to operate within ambient temperature environments from -40℃ to +85℃. Due consideration must be given to the de-rating curves when ascertaining the maximum power that can be drawn from the module. The maximum power which can be drawn is influenced by a number of factors, such as:

- Input voltage range
- Permissible output load (per derating curve)
- Forced air or natural convection
- Heat sink (optional)

8.2 Convection Requirements for Cooling

To predict the approximate cooling needed for the half brick module, refer to the power derating curves in **section 7.4**. These derating curves are approximations of the ambient temperatures and airflows required to keep the power module temperature below its maximum rating. Once the module is assembled in the actual system, the module's temperature should be monitored to ensure it does not exceed 85℃ as measured at the center of the top of the case (thus verifying proper cooling).

8.3 Thermal Considerations

The power module operates in a variety of thermal environments; however, sufficient cooling should be provided to help ensure reliable operation of the unit. Heat is removed by conduction, convection, and radiation to the surrounding environment. The example is presented in **section 7.4**. The power output of the module should not be allowed to exceed rated power (V_{o_set} x I_{o_max}).

8.4 Power Derating

The operating case temperature range of CBM70S series is -40℃ to +85℃. When operating the CBM70S series, proper derating or cooling is needed. (at 115Vac & 230Vac)
The maximum case temperature under any operating condition should not exceed 85℃.
The following curve is the derating curve of CBM70S series without heatsink.

Note: Pd is calculated after 1 minute of burn-in

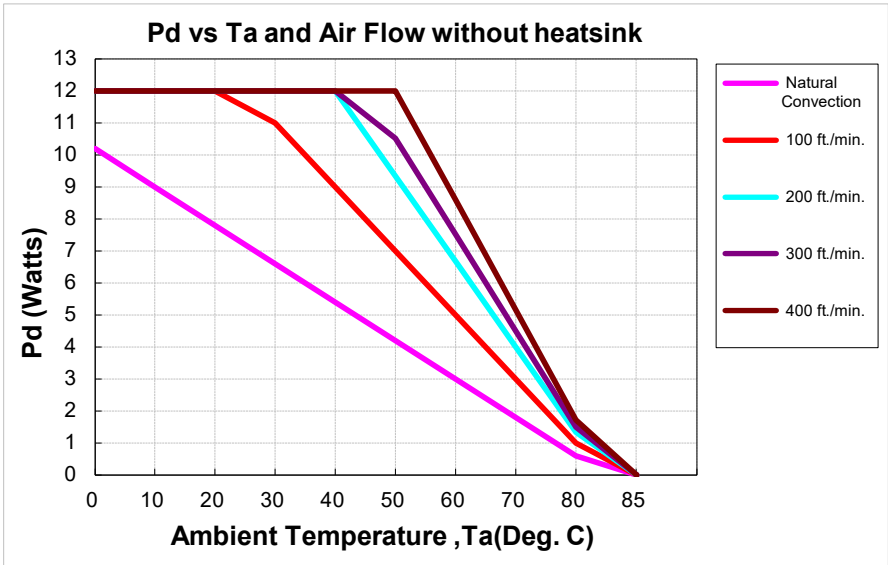

AIR FLOW RATE	TYPICAL R_{ca}
Natural Convection	8.33℃/W
100 ft./min. (0.5m/s)	5.0℃/W
200 ft./min. (1.0m/s)	3.75℃/W
300 ft./min. (1.5m/s)	3.33℃/W
400 ft./min. (2.0m/s)	2.91℃/W

Email: sales@powersolve.com.tw Web: www.powersolve.com.tw

Example without heatsink:

What is the minimum airflow necessary for a CBM70S120 operating at 230Vac, an output current of 5.83A, and a maximum ambient temperature of 35℃ without heatsink.

Solution:

Given: V_{in}=230Vac, V_o=12V_{dc}, I_o=5.83A

Determine Power dissipation (P_d): $P_d = P_i - P_o = P_o(1-\eta)/\eta$, P_d= 12V×5.83A×(1-0.88)/0.88=9.54Watts

Determine airflow: Given: P_d= 9.54W and T_a= 35℃

Check *Power Derating* curve: Minimum airflow= 100 ft./min.

Verify:

Maximum temperature rise is $\Delta T = P_d \times R_{ca}$ = 9.54×5= 47.7℃

Maximum case temperature is $T_c = T_a + \Delta T$= 82.7°C<85℃

Where:

The R_{ca} is thermal resistance from case to ambient environment.

T_a is ambient temperature and T_c is case temperature.

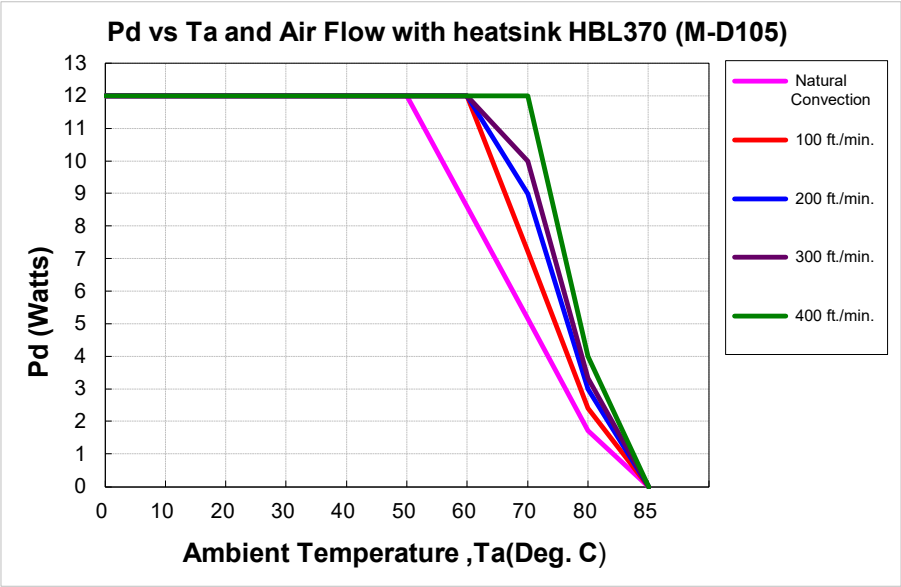

AIR FLOW RATE	TYPICAL R_{ca}
Natural Convection	2.91℃/W
100 ft./min. (0.5m/s)	2.08℃/W
200 ft./min. (1.0m/s)	1.67℃/W
300 ft./min. (1.5m/s)	1.50℃/W
400 ft./min. (2.0m/s)	1.25℃/W

Example with heatsink HBL370 (M-D105)**:**

What is the minimum airflow necessary for a CBM70S120 operating at 230Vac, an output current of 5A, and a maximum ambient temperature of 60℃ with heatsink HBL370 (M-D105).

Solution:

Given: V_{in}=230Vac, V_o=12V_{dc}, I_o=5A

Determine Power dissipation (P_d): P_d= Pi-Po= Po(1-η)/η, P_d= 12V×5A×(1-0.88)/0.88=8.18Watts

Determine airflow: Given: P_d= 8.18W and T_a = 60℃

Check above Power de-rating curve: Minimum airflow= Natural Convection

Verify:

Maximum temperature rise is $\Delta T = P_d \times R_{ca}$= 8.18×2.91= 23.8℃

Maximum case temperature is $T_c = T_a + \Delta T$= 83.8℃<85℃

Where:

The R_{ca} is thermal resistance from case to ambient environment.

T_a is ambient temperature and T_c is case temperature.

Email: sales@powersolve.com.tw Web: www.powersolve.com.tw

8.5 Half Brick Heat Sinks

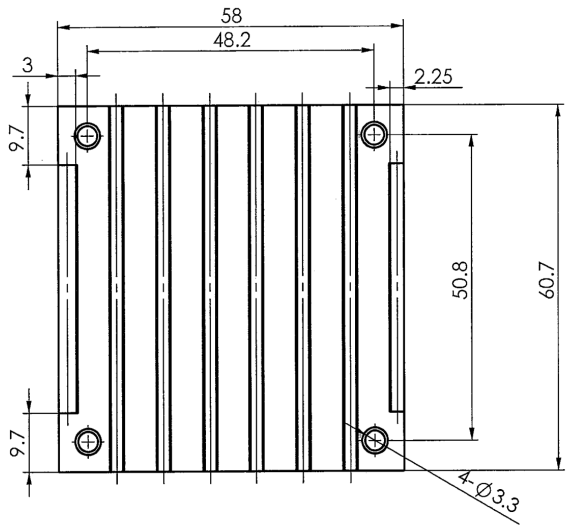

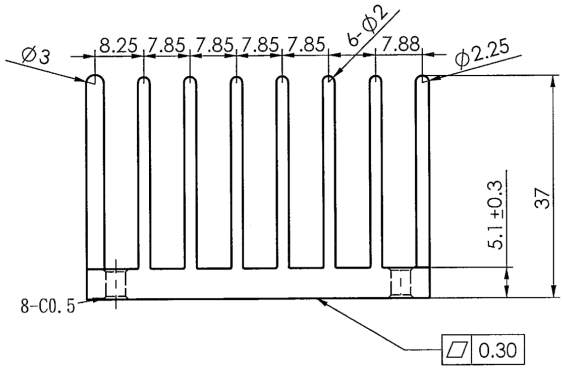

All Dimensions in mm
HBL370 (M-D105) Heat Sink G6620710201 60.7*58*37mm
Rca: 2.91℃/W (typ.), At natural convection
2.08℃/W (typ.), At 100LFM
1.67℃/W (typ.), At 200LFM
1.50℃/W (typ.), At 300LFM
1.25°℃/W (typ.), At 400LFM

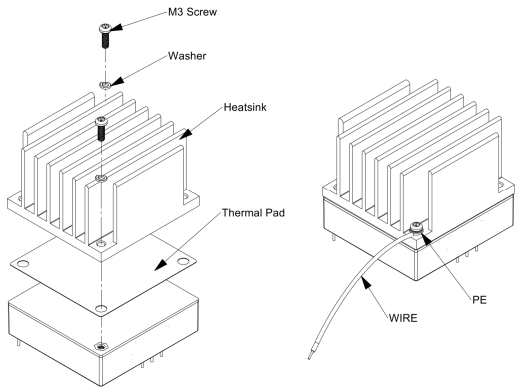

Heat Sink HBL370 (M-D105): 60.7*58*37mm (G6620710201)
Thermal Pad: 56.9*60*0.25mm(G6135041091)
Screw: K310W SMP+WS M3*0.5 10mm (G75A1300332)

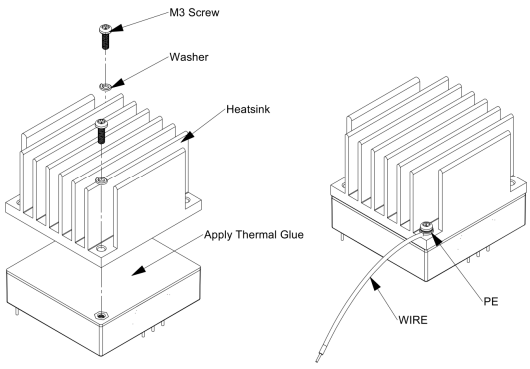

Heat Sink HBL370 (M-D105): 60.7*58*37mm (G6620710201)
Thermal Glue: Thermal Conductivity 3.5W/(m*K)
Screw: K310W SMP+WS M3*0.5 10mm (G75A1300332)

Email: sales@powersolve.com.tw Web: www.powersolve.com.tw

9. Packing Information

The packing information for CBM70S series is showing as follows:

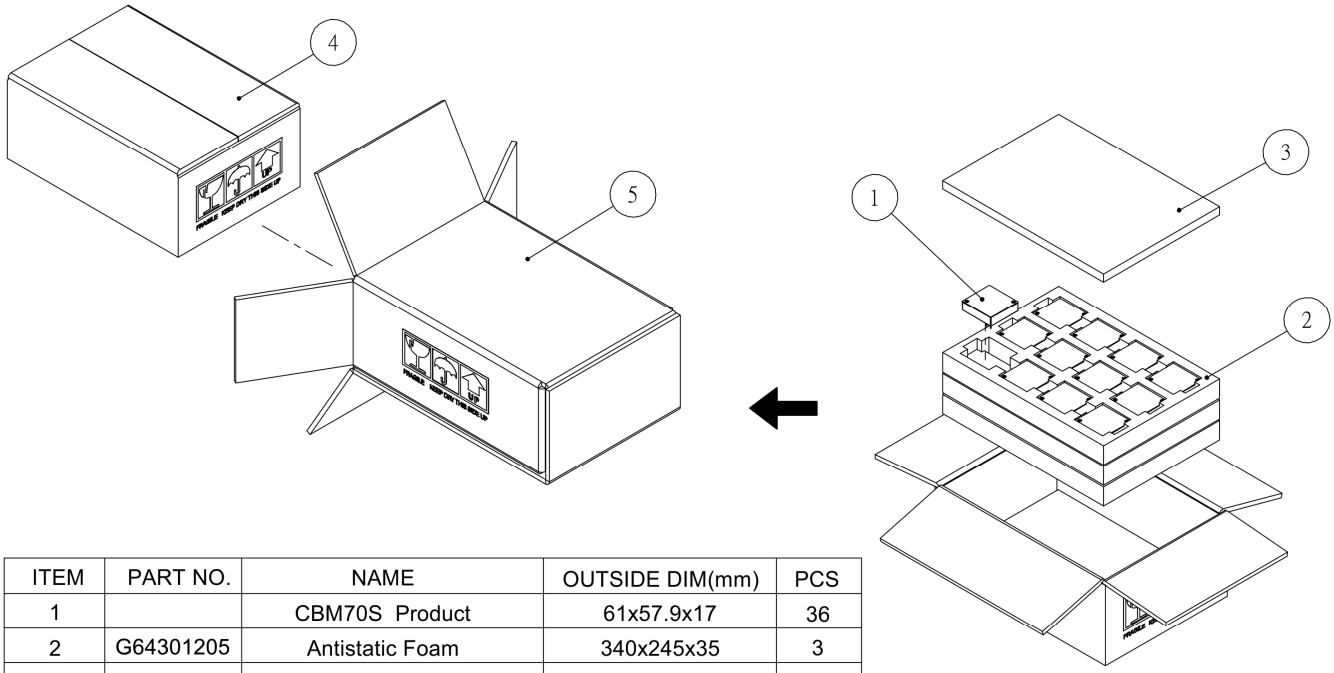

ITEM	PART NO.	NAME	OUTSIDE DIM(mm)	PCS
1		CBM70S Product	61x57.9x17	36
2	G64301205	Antistatic Foam	340x245x35	3
3	G64308319	Antistatic Foam	340x245x15	2
4	G64112339	No.59 Cardboard Box	360.6x257.6x148.5	1
5	G64112270	No.95 Cardboard Box	390.9x284.8x175.7	1

Each Box Packaging 36 PCS Products
Net weight Ref. 4.9 Kg
Gross weight Ref. 6.1 Kg

CBM70S 36 PCS a box, including the total weight of package material about 6.1Kg

Email: sales@powersolve.com.tw Web: www.powersolve.com.tw