PDF700 Series 700W High Density AC-DC

Features

- Universal Input Range 90~264Vac
- Efficiency up to 91.5%
- Full Brick Size
- Class I
- Approval Safety IEC/EN/UL 62368-1
- Operating Altitude 5000m
- Remote On/Off
- Over Temperature Protection
- Over Voltage Protection
- Continuous Short Circuit Protection
- Baseplate Cooling
- Compliance to CE101/CE102/RE101 of MIL-STD-461

E176177

MODEL NUMBER	OUTPUT VOLTAGE	OUTPUT CURRENT	RIPPLE & NOISE NOTE1 & 2	VOLTAGE ACCURACY NOTE3	LINE REGULATION NOTE4	LOAD REGULATION NOTE5	%EFF. (Typ.) NOTE6
PDF700S120	12 V	58.4 A	120 mV	±1.0%	±0.5%	±0.5%	87.5%
PDF700S240	24 V	29.2 A	240 mV	±1.0%	±0.5%	±0.5%	90%
PDF700S280	28 V	25.0 A	280 mV	±1.0%	±0.5%	±0.5%	90.5%
PDF700S480	48 V	14.6 A	480 mV	±1.0%	±0.5%	±0.5%	91%
PDF700S560	56 V	12.5 A	560 mV	±1.0%	±0.5%	±0.5%	91.5%

Note:

1. External components are required. please refer to the application note.
2. Add a 0.1uF ceramic capacitor and a 10uF E.L. capacitor to output for ripple & noise measuring @20MHz BW.
3. Voltage accuracy is set at 60% load.
4. Line regulation is measured from $100V_{ac}$ to $264V_{ac}$ with full load.
5. Load regulation is measured from 60%±40% rated load.
6. Typical efficiency at $230V_{ac}$ and full load at 25℃.
7. When the aluminum case of brick reaches temperature 100℃ the unit will be OTP. the unit need sufficient convection and heat sink.

PART NUMBER

Series	Number of Outputs	Nominal Output Voltage	Mounting Inserts
PDF700	O	XXX	-Y (Option)
PDF700	S：Single	120：12V 240：24V 280：28V 480：48V 560：56V	None：Clear Mounting Inserts (3.5mm DIA.) -C0：M3x0.5 Mounting Inserts

Part Number Example:

PDF700S120:700W, Single $12V_{dc}$ Output, Clear Mounting Inserts

Email: sales@powersolve.com.tw Web: www.powersolve.com.tw

TECHNICAL SPECIFICATIONS

(All specifications are typical at nominal input, full load at 25℃ unless otherwise noted.)

ABSOLUTE MAXIMUM RATINGS

PARAMETER	NOTES and CONDITIONS	Device	Min.	Typ.	Max.	Units
Input Voltage		All	90		264	V_{ac}
Operating Case Temperature	At the center of base plate	All	-40		100	℃
Storage Temperature		All	-55		105	℃
Operating Altitude		All			5000	m

INPUT CHARACTERISTICS

PARAMETER	NOTES and CONDITIONS	Device	Min.	Typ.	Max.	Units
Operating Voltage Range		All	100		240	V_{ac}
Input Frequency Range		All	47		63	Hz
Maximum Input Current	100% Load, V_{in}=100Vac	All			9	A
Leakage Current	Only PDF700S Brick	All			0.01	mA
Inrush Current	V_{in}=240V_{ac}, Cold start at 25℃ (External inrush resister 10Ω)	All			35	A
Under Voltage Protection		All	63	70	77	V_{ac}
Power Factor	230V_{ac}/50Hz @ Full load	All		0.97		

OUTPUT CHARACTERISTICS

PARAMETER	NOTES and CONDITIONS	Device	Min.	Typ.	Max.	Units
Output Voltage Set Point	V_{in}=115V_{ac} and 230V_{ac}, I_o=60% Io max., T_c=25℃	PDF700S120	11.88	12	12.12	V_{dc}
		PDF700S240	23.76	24	24.24	
		PDF700S280	27.72	28	28.28	
		PDF700S480	47.52	48	48.48	
		PDF700S560	55.44	56	56.56	
Operating Output Current Range	V_{in}=115V_{ac} and 230V_{ac}, T_c=25℃	PDF700S120	0		58.4	A
		PDF700S240	0		29.2	
		PDF700S280	0		25.0	
		PDF700S480	0		14.6	
		PDF700S560	0		12.5	
Holdup Time	V_{in}=115Vac (Refer to the application note)	All		16		mS
Output Voltage Regulation						
Load Regulation	20% Load to 100% load	All			±0.5	%
Line Regulation	V_{in}=High line to low line	All			±0.5	%
Output Voltage Trim Range	P_o ≦ max. rated power, I_o ≦ I_o_max.	PDF700S560	-5		+1.8	%
		Others	-5		+5	
Over Current Protection	Hiccup mode, auto recovery	All	105		195	%
Over Voltage Protection	Latch off (recycle AC input to restart)	PDF700S120		14.8	16.8	V_{dc}
		PDF700S240		30.3	33.6	
		PDF700S280		34.4	39.2	
		PDF700S480		55.9	57.6	
		PDF700S560		58.0	59.9	
Output Ripple and Noise	1. Add a 0.1uF ceramic capacitor and a 10uF aluminum electrolytic capacitor to output. 2. Oscilloscope is 20MHz band width 3. Ambient temperature=25℃ 4. The output capacitor is necessary, such as load capacitance in the table below	PDF700S120		80	120	mV
		PDF700S240		160	240	
		PDF700S280		180	280	
		PDF700S480		260	480	
		PDF700S560		260	560	

Email: sales@powersolve.com.tw Web: www.powersolve.com.tw

PARAMETER	NOTES and CONDITIONS	Device	Min.	Typ.	Max.	Units
Load Capacitance	1. Input voltage is 115V_{ac} and 230V_{ac} 2. Output is max. load 3. Ambient temperature=25℃	PDF700S120	11700		58340	uF
		PDF700S240	8000		29170	
		PDF700S280	8000		25000	
		PDF700S480	2820		14590	
		PDF700S560	2820		12500	

EFFICIENCY

PARAMETER	NOTES and CONDITIONS	Device	Min.	Typ.	Max.	Units
Efficiency	1. Output is rated load 2. Ambient temperature=25℃ @ input voltage is 230V_{ac}	PDF700S120		87.5		%
		PDF700S240		90		
		PDF700S280		90.5		
		PDF700S480		91		
		PDF700S560		91.5		

ISOLATION CHARACTERISTICS

PARAMETER	NOTES and CONDITIONS	Device	Min.	Typ.	Max.	Units
Input to Output	1 Minute (without dielectric breakdown)	All			3000	V_{ac}
Input to Earth (Ground)	1 Minute (without dielectric breakdown)	All			2000	V_{ac}
Output to Earth (Ground)	1 Minute (without dielectric breakdown)	All			500	V_{ac}
Isolation Resistance	Input to output	All	100			MΩ

FEATURE CHARACTERISTICS

PARAMETER	NOTES and CONDITIONS	Device	Min.	Typ.	Max.	Units
Switching Frequency		All		220		kHz
Over Temperature Shutdown	Temperature at the center part of base plate, auto recovery	All		110		℃
Over Temperature Recovery				105		

GENERAL SPECIFICATIONS

PARAMETER	NOTES and CONDITIONS	Device	Min.	Typ.	Max.	Units
MTBF	I_o=100%, T_a=25°C per MIL-HDBK-217F I_o=100%, T_a=25°C, Telcordia SR332	All	250 1900			k hours
Humidity	Non-condensing	All			93	% RH
Shock	Meets MIL-STD-810F Table 516.5,Table 516.5-I 10ms, each axis 3 times(±X、±Y、±Z axis)	All		75		g
Vibration	Meets MIL-STD-810F Table 514.5C-VIII,15~2000Hz, X、Y、Z axis, 1hr (each axis),. total 3 hrs.	All		4		g
Weight		All		210		grams
Dimensions		All	4.60x2.40x0.50 Inches (116.8x61.0x12.7mm)			
Case Material	Plastic DAP UL 94V-0					
Base Plate Material	Aluminum baseplate					
Potting Material	UL 94V-0					
Safety	Class I, IEC/EN/UL 62368-1					
EMC Emission	EN 55032					Class A
Conducted Disturbance	EN 55032					Class A
Radiated Disturbance	EN 55032					Class A
Harmonic Current Emissions	EN 61000-3-2:2014					
Voltage Fluctuations & Flicker	EN 61000-3-3:2013					
EMC Immunity	EN 55035					
Electrostatic Discharge (ESD)	IEC 61000-4-2:2008, Air Discharge: ±8kV Contact Discharge: ±4kV					Criterion A
Radio-Frequency, Continuous Radiated Disturbance	IEC 61000-4-3:2020					Criterion A
Electrical Fast Transient (EFT)	IEC 61000-4-4:2012, ±1kV, ±2kV					Criterion A

GENERAL SPECIFICATIONS

Surge	IEC61000-4-5:2014+A1:2017 L-N: ±0.5kV, ±1kV, ±2kV, L-E(ground): ±0.5kV, ±1kV, ±2kV, ±4kV	Criterion A
Conducted Disturbances, Induced by RF Fields	IEC 61000-4-6:2013+COR1:2015	Criterion A
Power Frequency Magnetic Field	IEC 61000-4-8:2009	Criterion A
Voltage Dips	IEC 61000-4-11: 2004+A1:2017, Dip: 30% Reduction, Dip >95% Reduction	Criterion A
Voltage Interruptions	IEC 61000-4-11: 2004+A1:2017, >95% Reduction	Criterion B
MIL-STD-461 EMI (With External Circuits)	Compliance to CE101 (Submarine), CE102, RE101	

CHARACTERISTIC CURVE

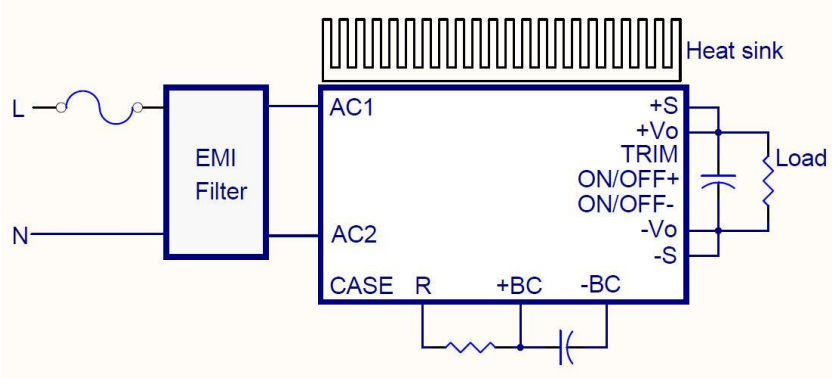

Simplified Application Circuit

Power Derating Curve

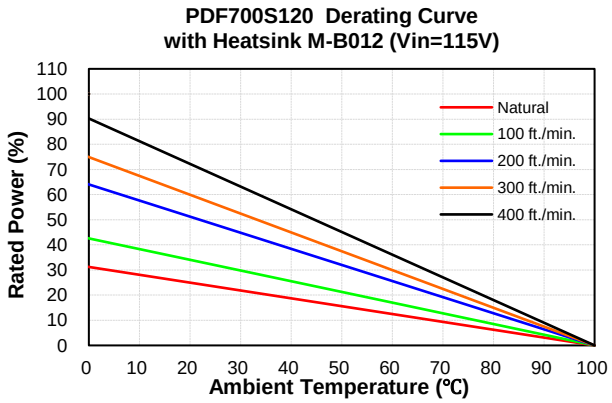

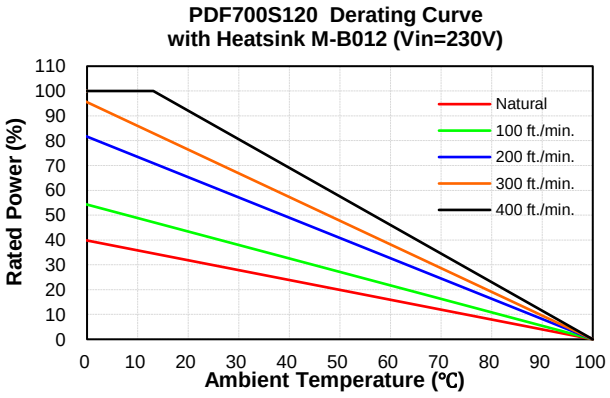

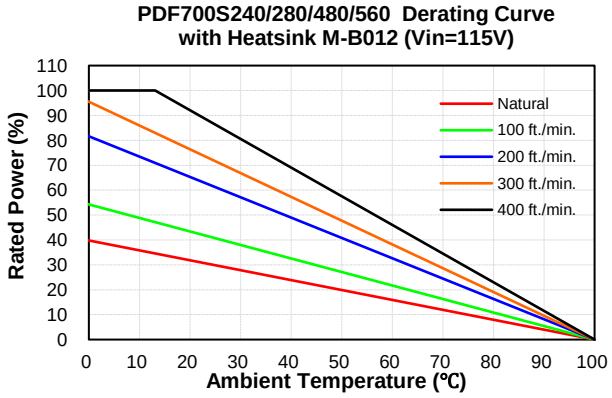

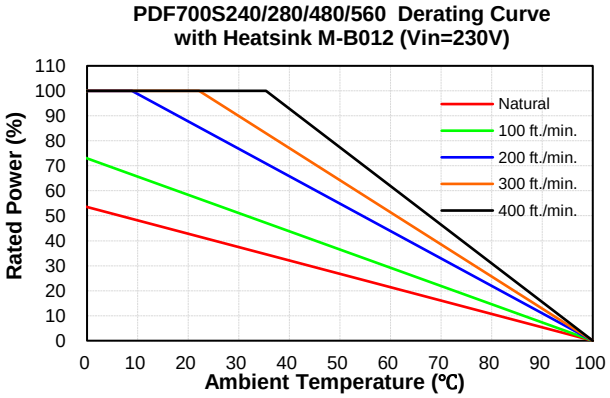

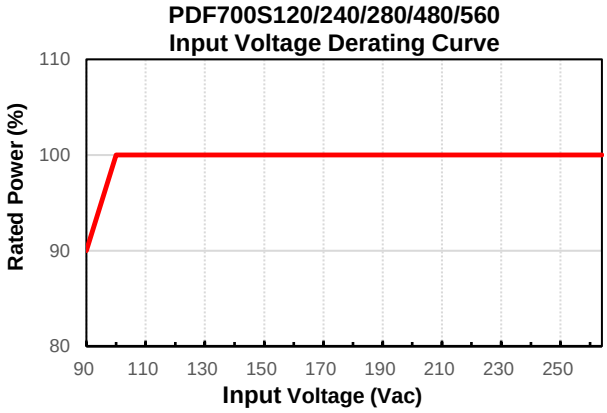

Performance Data

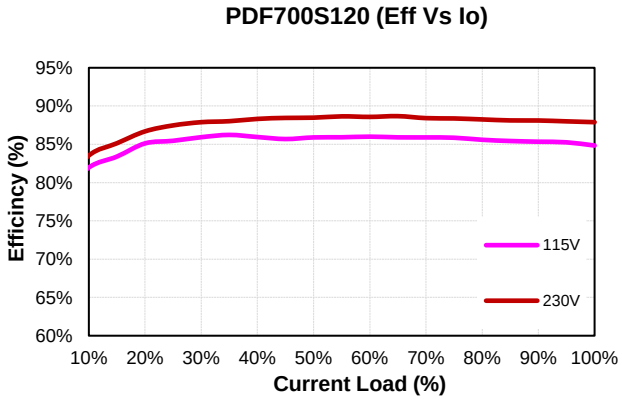

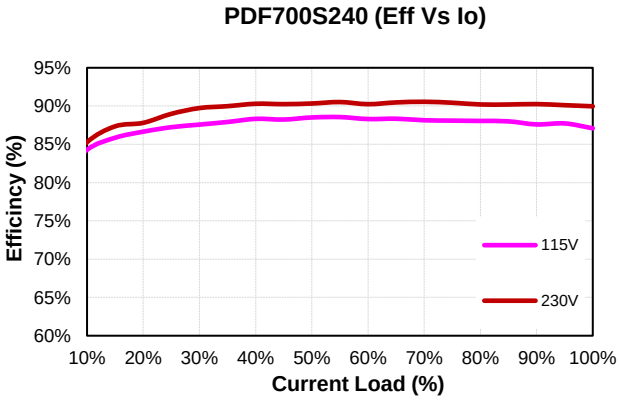

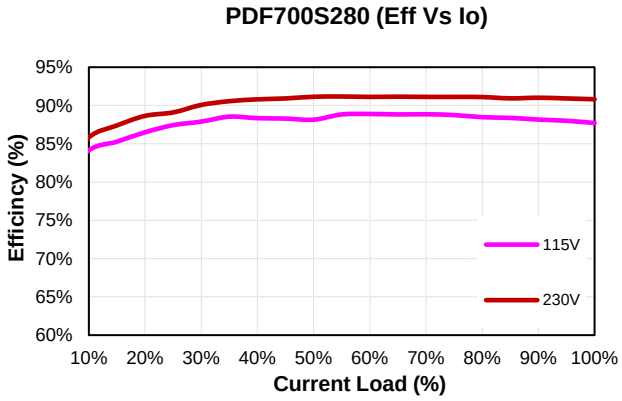

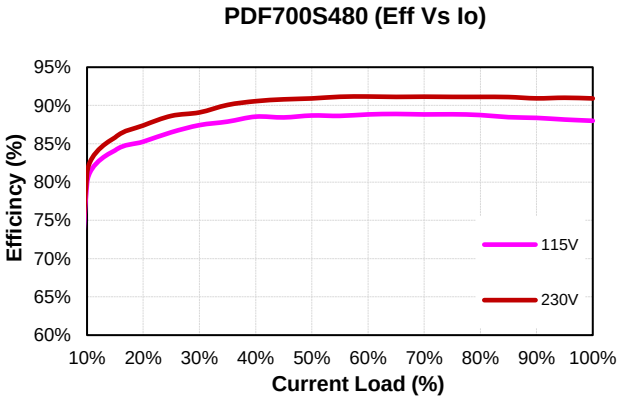

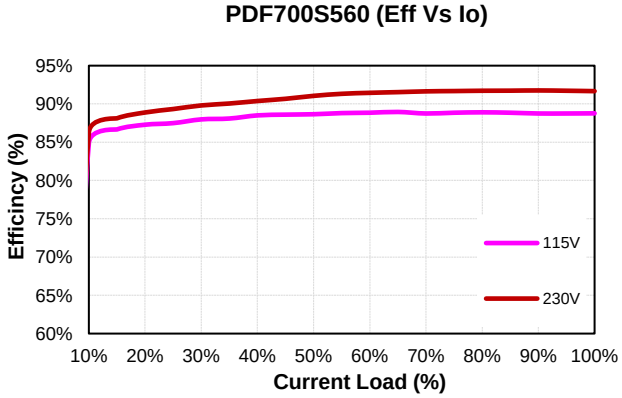

MECHANICAL SPECIFICATION

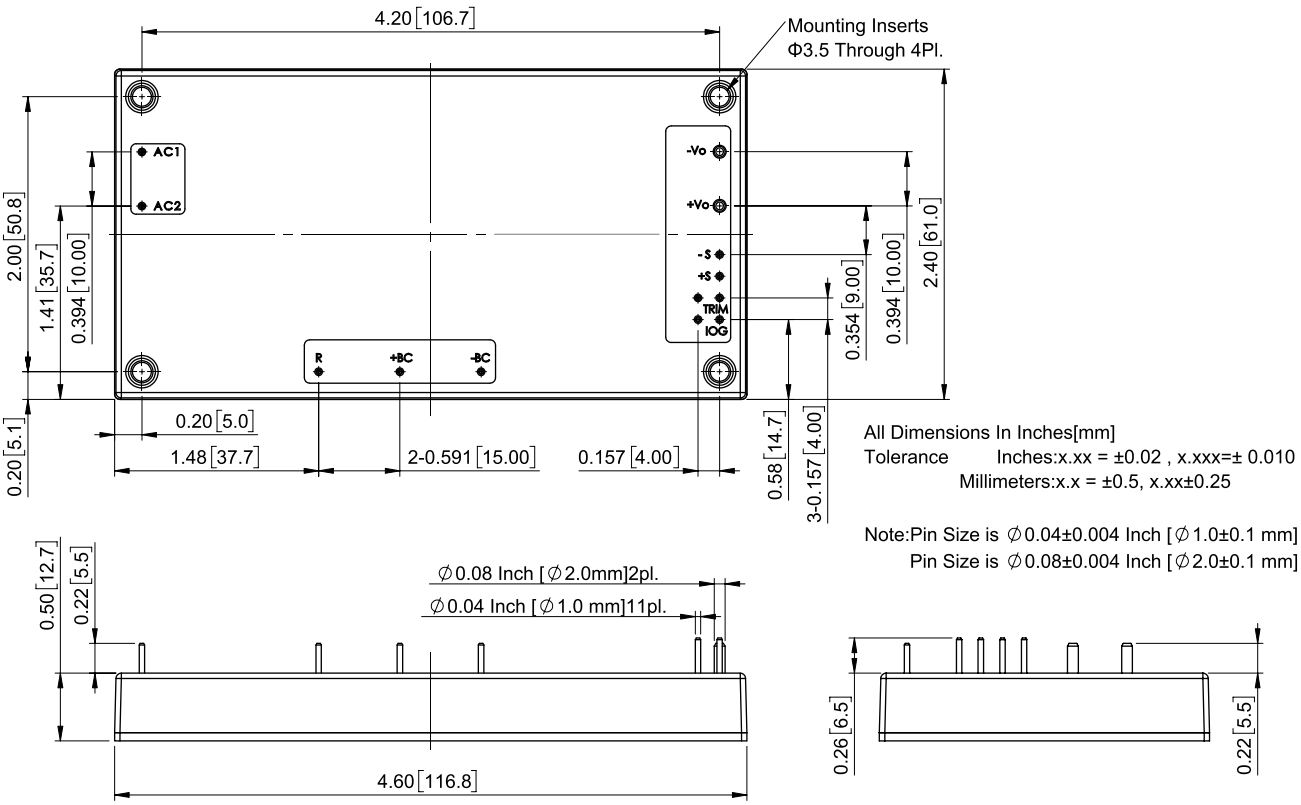

Email: sales@powersolve.com.tw Web: www.powersolve.com.tw

AC-DC Switching Power Module
PDF700S SERIES
APPLICATION NOTE

Contents

1. Introduction 3
2. Pin Function Description 3
3. Electrical Block Diagram 3
4. Connection for Standard Use 4
5. Recommended Layout PCB Footprint and Soldering Information 4
6. Test Set-Up 5
7. Features and Functions 5
7.1 Over Current Protection 5
7.2 Over Voltage Protection 5
7.3 Over Temperature Protection 5
7.4 Remote On/Off 5
7.5 Output Remote Sensing 6
7.6 Output Voltage Adjustment 6
7.7 IOG Signal 7
8. Input / Output Considerations 8
8.1 Hold Up Time 8
8.2 Inrush Current Limiting Resistor TRF1 8
8.3 Input Derating Curve 8
8.4 Output Ripple and Noise 8
8.5 Output Capacitance 9
8.6 Series Operation 9
8.7 Parallel Operation 10
8.8 Input EMI Filter at The Power Module 11
9. Thermal Design 15
9.1 Operating Temperature Range 15
9.2 Convection Requirements for Cooling 15
9.3 Thermal Considerations 15
9.4 Power Derating 15
9.5 Full Brick Heat Sink 17
10. Packing Information 18

PDF700S Series
Application Note V14

1. Introduction

The PDF700S series of AC-DC converters offers 700 watts of output power at single output voltages of 12, 24, 28, 48, 56Vdc. High efficiency up to 91.5%, allowing case operating temperature range form -40℃ to 100℃. An optional heat sink is available to extend the full power range of the unit.

The standard control functions include remote **on/off** and +5%, -5% (PDF700S560: +1.8%, -5%) adjustable output voltage.

Fully protected against input UVLO (under voltage lock out), output over-current, output over-voltage and over-temperature and continuous short circuit conditions.

2. Pin Function Description

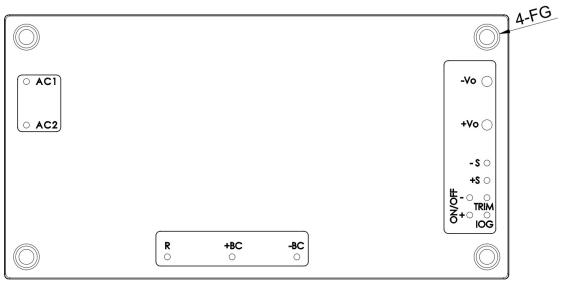

No	Label	Function	Description
1	AC1	AC Input	AC supply input
2	AC2	AC Input	
3	R	Inrush Current Limit	Inrush current can be reduced by external resistor
4	+BC	PFC Positive Output	Connect capacitors between +BC and -BC to stable operation
5	-BC	PFC Negative Output	
6	ON/OFF+	Remote On/Off+	Connect current source between ON/OFF+ and ON/OFF- to remote on/off the module
7	ON/OFF-	Remote On/Off -	
8	IOG	Monitor Operating Signal	Monitor normal and abnormal operation of the converter
9	Trim	Trim	External output voltage adjustment
10	+S	+Sense	Positive output remote sense
11	-S	-Sense	Negative output remote sense
12	+Vo	+V Output	Positive power output
13	-Vo	-V Output	Negative power output
--	--	Mounting Insert	Mounting insert (FG)

Note: Base plate can be connected to FG through M3 threaded mounting insert. Recommended torque 3Kgf-cm.

3. Electrical Block Diagram

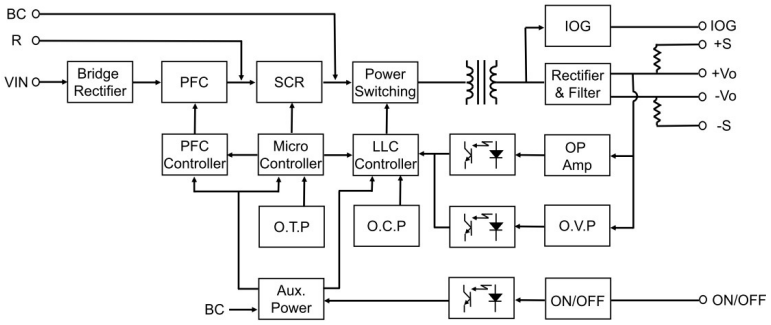

4. Connection for Standard Use

The connection for standard use is shown below. An external EMI filter for all models is recommended to reduce input current noise. The bus capacitor (Cbc) is recommended to set 880uF (RUBYCON CXW 220uFx4). The TFR1 is used to limit input inrush current.

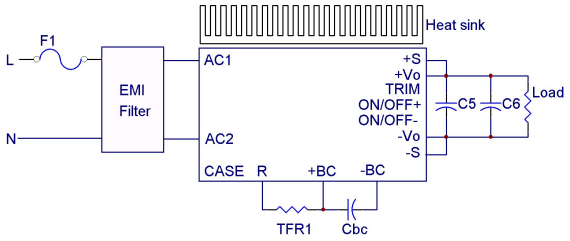

Symbol	Component
F1	Input fuse
EMI Filter	External EMI filter on the input side
TFR1	External thermal fuse resistor
Cbc	External capacitor connected between +BC and -BC is necessary to keep operating stable
C5, C6	External capacitor 10 and 0.1uF for ripple and noise on the output side
ON/OFF+ ON/OFF-	External Remote on/off control
TRIM	External output voltage adjustment
+S, -S	External voltage compensation
Heat sink	External heat sink

5. Recommended Layout PCB Footprint and Soldering Information

The system designer or end user must ensure that metal and other components in the vicinity of the converter meet the spacing requirements for which the system is approved. Low resistance and inductance PCB layout traces are the norm and should be used where possible. Due consideration must also be given to proper low impedance tracks between power module, input and output grounds. The recommended soldering profile and PCB layout are shown below.

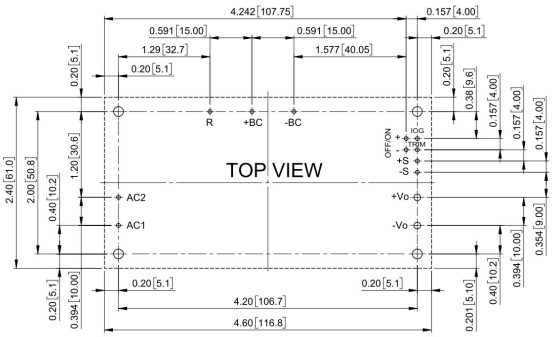

Lead Free Wave Soldering Profile

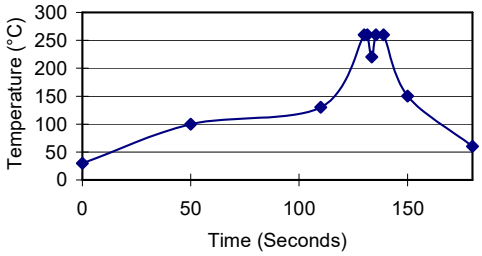

Note：

1. Soldering Materials: Sn/Cu/Ni
2. Ramp up Rate During Preheat: 1.4℃/Sec (From 50℃ to 100℃)
3. Soaking Temperature: 0.5℃/Sec (From 100℃ to 130℃), 60±20 Seconds
4. Peak Temperature:260℃, above 250℃ 3~6 Seconds
5. Ramp up Rate During Cooling: -10.0℃/Sec (From 260℃ to 150℃)

6. Test Set-Up

The basic test set-up to measure parameters such as efficiency and load regulation is shown below. When testing the PDF700S series under any transient conditions, please ensure that the transient response of the source is sufficient to power the equipment under test. We can calculate:

- Efficiency
- Load regulation and line regulation

The value of efficiency is defined as:

$$\eta = \frac{V_o \times I_o}{V_{in} \times I_{in}} \times 100\%$$

Where:

V_o is output voltage,
I_o is output current,
V_{in} is input voltage,
I_{in} is input current

The value of load regulation is defined as:

$$Load\ reg. = \frac{V_1 - V_2}{V_2} \times 100\%$$

Where:

V_1 is the output voltage at 20% load.
V_2 is the output voltage at 100% load.

The value of line regulation is defined as:

$$Line\ reg. = \frac{V_{HL} - V_{LL}}{V_{LL}} \times 100\%$$

Where:

V_{HL} is the output voltage of maximum input voltage at full load.
V_{LL} is the output voltage of minimum input voltage at full load.

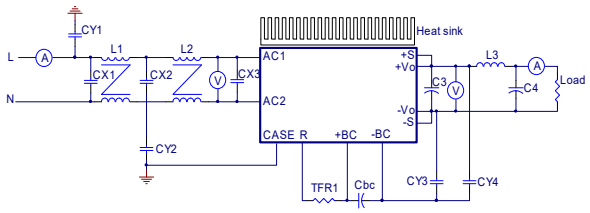

7. Features and Functions

7.1 Over Current Protection

All models have internal over current and continuous short circuit protection. The unit operates normally once the fault condition is removed. At the point of current limit inception, the converter will go into hiccup mode protection.

7.2 Over Voltage Protection

All different voltage models have a fully continuous over voltage protection. The power module will supply OVP. In the event of happen the OVP, the converter will shut down, the converter will go into latch mode protection.

7.3 Over Temperature Protection

These modules have an over temperature protection circuit to safeguard against thermal damage. Shutdown occurs with the maximum case reference temperature is exceeded. The module will restart when the case temperature falls below over temperature recovery threshold. Please measure case temperature of the center part of aluminum base plate

7.4 Remote On/Off

The PDF700S series allows the user to switch the module on and off electronically with the remote **on/off** feature. The converter turns off if the current is >10mA (20mA max.) between **on/off+** pin and **on/off-** pin. Setting the pin current <6mA or open circuit will turn the converter on.
If not using the remote **on/off** pin, leave the pin open (converter will be on). The signal level of the remote **on/off+** is defined with respect to **on/off-**.

On/Off Pin Current	Module State
<6mA or Open	Module On
>10mA (20mA max.)	Module Off

On/off function Inside connection sees below.

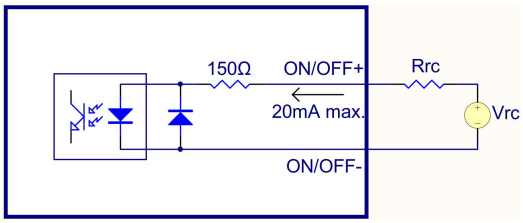

7.5 Output Remote Sensing

The PDF700S series converter has the capability to remotely sense both lines of its output. This feature moves the effective output voltage regulation point from the output of the unit to the point of connection of the remote sense pins. This feature automatically adjusts the real output voltage of the PDF700S series in order to compensate for voltage drops in distribution and maintain a regulated voltage at the point of load. The remote-sense voltage range is:

$$[(+V_{out}) - (-V_{out})] - [(+Sense) - (-Sense)] \leqq 5\% \text{ of } V_{o_nominal}$$

When remote sense is in use, the sense should be connected by twisted-pair wire or shield wire. If the sensing patterns short, heave current flows and the pattern may be damaged. Output voltage might become unstable because of impedance of wiring and load condition when length of wire is exceeding 400mm. This is shown in the schematic below.

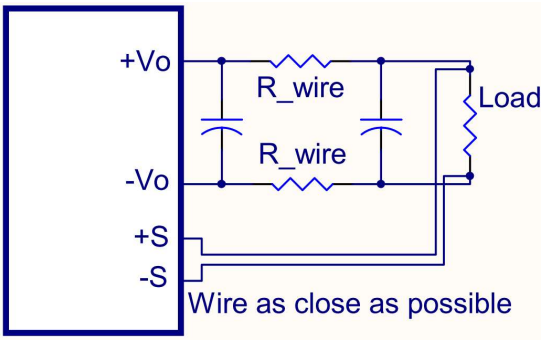

If the remote sense feature is not to be used, the sense pins should be connected locally. The +Sense pin should be connected to the +Vout pin at the module and the -Sense pin should be connected to the -Vout pin at the module. Wire between +Sense and +Vout and between -Sense and -Vout as short as possible. Loop wiring should be avoided. The converter might become unstable by noise coming from poor wiring. This is shown in the schematic below.

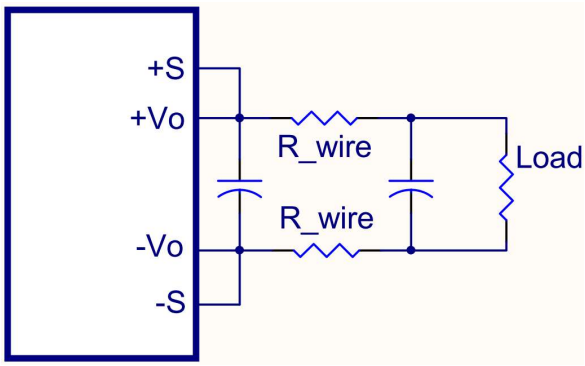

Note: Although the output voltage can be varied (increased or decreased) by both remote sense and trim, the maximum variation for the output voltage is the sum of the values. The output power delivered by the module is defined as the voltage at the output terminals multiplied by the output current. Using remote sense and trim can cause the output voltage to increase and consequently increase the power output of the module if output current remains unchanged. Always ensure that the output power of the module remains at or below the maximum rated power. Also be aware that if $V_{o.set}$ is below nominal value, $P_{out.max.}$ will also decrease accordingly because $I_{o.max}$ is an absolute limit. Thus, $P_{out.max.}=V_{o.set} \times I_{o.max.}$ is also an absolute limit.

7.6 Output Voltage Adjustment

Output may be externally trimmed (+5% to -5%, (PDF700S560: +1.8%, -5%)) with a fixed resistor. $P_o \leqq$ max rated power, $I_o \leqq I_{o_max.}$. In order to trim the voltage up or down, one needs to connect the trim resistor either between the trim pin and -Sense for trim-up or between trim pin and +Sense for trim-down. The output voltage trim range is +5% to -5% (PDF700S560: +1.8%, -5%). This is shown:

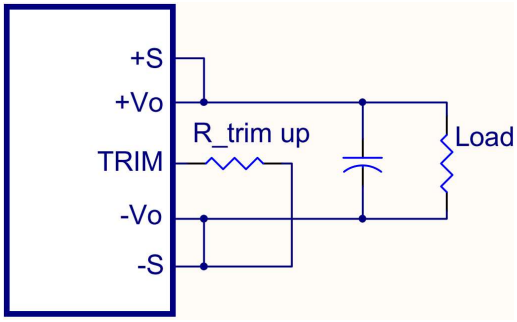

Trim-up Voltage Setup

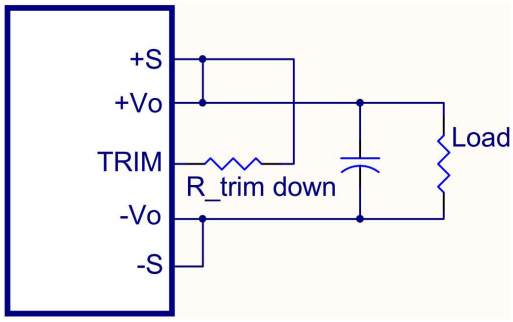

Trim-down Voltage Setup

The PDF700S120 value of R_{trim_up} defined as:

$$R_{trim_{up}} = \left[\frac{4950\times Vout-62640}{180.025 \quad \times Vout}\right](\text{k}\Omega)$$

The PDF700S240 value of R_{trim_up} defined as:

$$R_{trim_{up}} = \left[\frac{8378\times Vout-213200}{344.875-14.35\times Vout}\right](\text{k}\Omega)$$

The PDF700S280 value of R_{trim_up} defined as:

$$R_{trim_{up}} = \left[\frac{9641\times Vout-285300}{392.025-14\times Vout}\right](\text{k}\Omega)$$

The PDF700S480 value of R_{trim_up} defined as:

$$R_{trim_{up}} = \left[\frac{4092\times Vout-207200}{327.575 \quad .82\times Vout}\right](\text{k}\Omega)$$

The PDF700S560 value of R_{trim_up} defined as:

$$R_{trim_{up}} = \left[\frac{102 \quad \times Vout-585900}{384.225- \quad .82\times Vout}\right](\text{k}\Omega)$$

Where:

R_{trim_up} is the external resistor in kΩ

V_{out} is the desired output voltage

For example, to trim-up the output voltage of 12V module (PDF700S120) by 5% to 12.6V, R_{trim_up} is calculated as follows:

V_{out}=12.6V

$$R_{tri \quad up} = \left[\frac{4950\times 12.6-62640}{180.025-15\times 12.6}\right] = 30.1(\text{k}\Omega)$$

The typical value of R_{trim_up}

Trim up (%)	12V	24V	28V	48V
	R_{trim_up} (kΩ)			
1%	1491	3408	3248	2884
2%	573.9	1264	1274	1083
3%	271.3	618.4	618.1	509.2
4%	120.4	307.1	290.9	227.3
5%	30.1	123.9	94.7	59.63

For Vo:56V

Trim up (%)	56V
	R_{trim_up} (kΩ)
1%	4815
1.8%	617.9

The PDF700S120 value of R_{trim_down} defined as:

$$R_{tri \quad down} = \left[\frac{3601}{180.025 \quad \times Vout}\right] - 367.95(\text{k}\Omega)$$

The PDF700S240 value of R_{trim_down} defined as:

$$R_{tri \quad down} = \left[\frac{13380}{344.875-1 \quad .35\times Vout}\right] - 656.97(\text{k}\Omega)$$

The PDF700S280 value of R_{trim_down} defined as:

$$R_{tri \quad down} = \left[\frac{17130}{392.025-14\times Vout}\right] - 771.44(\text{k}\Omega)$$

The PDF700S480 value of R_{trim_down} defined as:

$$R_{trim_{down}} = \left[\frac{12250}{327.575-6.82\times Vout}\right] - 670(\text{k}\Omega)$$

The PDF700S560 value of R_{trim_down} defined as:

$$R_{tri \quad down} = \left[\frac{37500}{384.225- \quad .82\times Vout}\right] - 1378(\text{k}\Omega)$$

Where:

R_{trim_down} is the external resistor in kΩ

V_{out} is the desired output voltage

For example, to trim-down the output voltage of 12V module by 5% to 11.4V, R_{trim_down} is calculated as follows:

V_{out}=11.4V

$$R_{trim_{down}} = \left[\frac{3601}{180.025- \quad \times 11.4}\right] - 367.95 = 31(\text{k}\Omega)$$

The typical value of R_{trim_down}

Trim down (%)	12V	24V	28V	48V	56V
	R_{trim_down} (kΩ)				
1%	1605	2757	3571	2841	4501
2%	625.4	1160	1407	1142	2149
3%	295.8	581.1	682.1	550.6	1103
4%	130.5	281.9	319.3	250.4	510.9
5%	31	99.2	101.4	68.7	130.2

7.7 IOG Signal

Normal and abnormal operation of the converter can be monitored using the IOG signal. The output of this signal monitor is on the secondary side and is an open collector output, we can use the external DC supply as shown in the following figure. the ground reference is the -V_o.

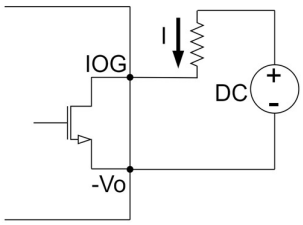

External DC supply (DC：50 V_{max}, I：0.1 A_{max})

This signal is low when the converter is operating normally and high when the converter is disabled or operating abnormally.

Also note that IOG becomes unstable under the following conditions:

- Operation of over current protection (OCP)
- Light load conditions
- Dynamic load operation

8. Input / Output Considerations

8.1 Hold Up Time

The capacitor Cbc is used to hold up time function. When the input power supply is interrupted, the PDF700S series use the energy stored in Cbc to support operation. A typical configuration is shown below.

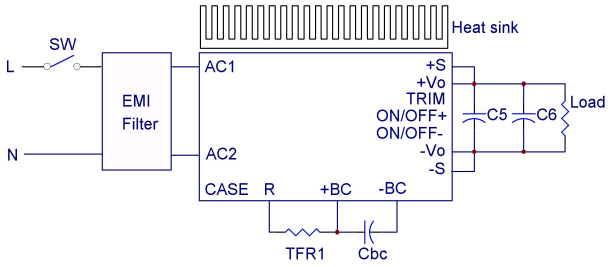

This function provides energy that maintains the DC-DC converter in operation for 10mS and 16mS hold up time. The capacitance (Cbc) in the application is recommended as below (Allowable capacitance range: 660~2200uF).

Capacitance / Hold up time	Cbc
10mS	220uF x 3
16mS	220uF x 4

8.2 Inrush Current Limiting Resistor TRF1

TRF1 resistor is used to limit the primary inrush current. The resistor has to connect between R and +BC. If the resistor is not connected, the power supply will not operate. TRF1 is a cement resistor with overheat protection function. It should have greater withstanding capability to Inrush Current. TRF1 is recommended to set from 4.7Ω to 22Ω.

8.3 Input Derating Curve

PDF700S series has derating by input voltage is required shown below.

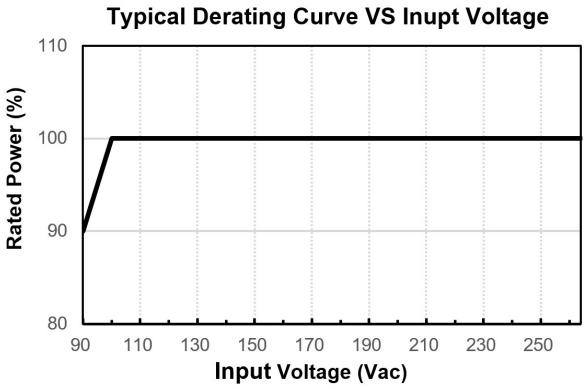

8.4 Output Ripple and Noise

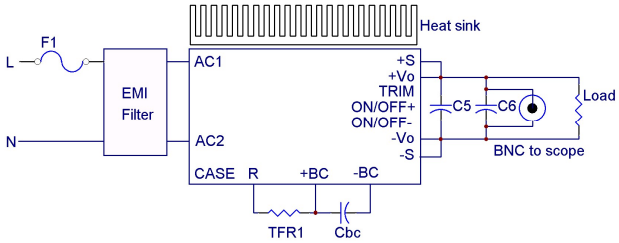

Output ripple and noise measured with 10uF aluminum capacitor and 1uF ceramic capacitors across output. A 20 MHz bandwidth oscilloscope is normally used for the measurement.

The conventional ground clip on an oscilloscope probe should never be used in this kind of measurement. This clip, when placed in a field of radiated high frequency energy, acts as an antenna or inductive pickup loop, creating an extraneous voltage that is not part of the output noise of the converter.

Another method is shown in below, in case of coaxial-cable/BNC is not available. The noise pickup is eliminated by pressing scope probe ground ring directly against the -Vout terminal while the tip contacts the +Vout terminal. This makes the shortest possible connection across the output terminals.

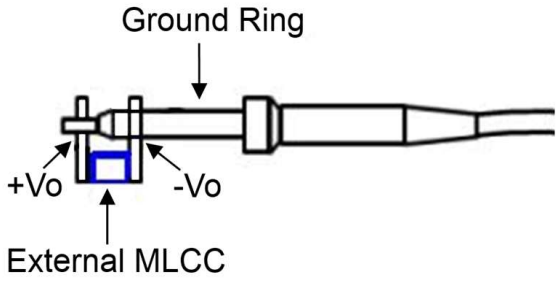

8.5 Output Capacitance

The PDF700S series converters need external capacitors. For good transient response, low ESR output capacitors should be located close to the point of load (<20mm). PCB design emphasizes low resistance and inductance tracks in consideration of high current applications. Output capacitors with their associated ESR values have an impact on loop stability and bandwidth.

8.6 Series Operation

Series operation is possible by connecting the outputs two or more units. Connection is shown in below. The output current in series connection should be lower than the lowest rate current in each power module.

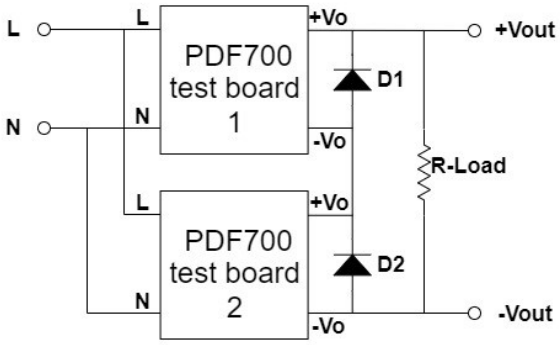

Simple Series Operation Connect Circuit

Note:

1. L/N：input voltage 90~264V_{ac}.
2. The PDF700 test board contains PDF700 module and external components. The external components are presented in section 8.8.
3. Recommend Schottky diode (D1, D2) be connected across the output of each series connected converter, and the external diode should be capable of handling the full load current for as long as the application is expected to run with any unit shut down.

Series for ±output operation is possible by connecting the outputs two units, as shown in the schematic below.

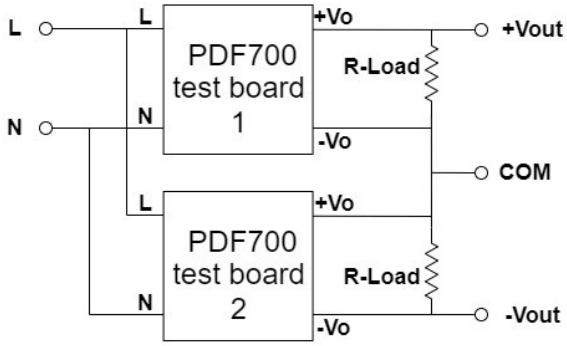

Simple ±Output Operation Connect Circuit

Note:

1. L/N：input voltage 90~264V_{ac}.
2. The PDF700 test board contains PDF700 module and external components. The external components are presented in section 8.8.

8.7 Parallel Operation

If parallel operation is required, it is recommended to use the CSC01 module. It is also possible to connect each output for N+1 redundant operation. The operation of CSC01 can be found in the CSC01 application note. Parallel operation is possible by connecting the units as shown below.

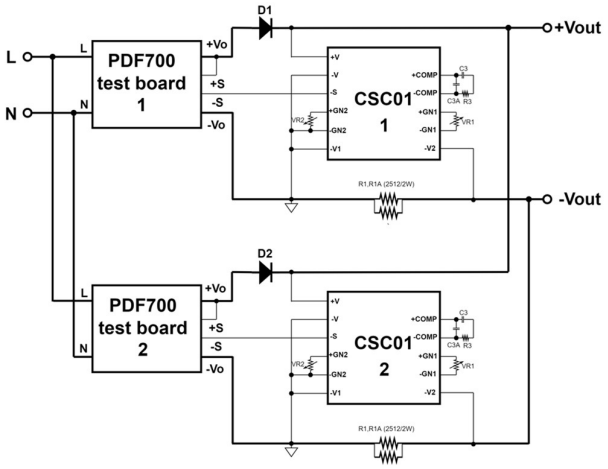

Note:

1. L/N：input voltage 90~264V_{ac}.
2. The PDF700 test board contains PDF700 module and external components. The external components are presented in section 8.8.

8.8 Input EMI Filter at The Power Module

The converters must be connected to low AC source impedance. The EMI filter should be placed close to the converter AC input pins. However, the external input capacitors are chosen for suitable ripple handling capability. Circuit as shown as below represents typical measurement methods for input current. The input current is measured by current probe to oscilloscope.

To use PDF700 series, connection shown below and external components are required to meet EN55032 Class A.

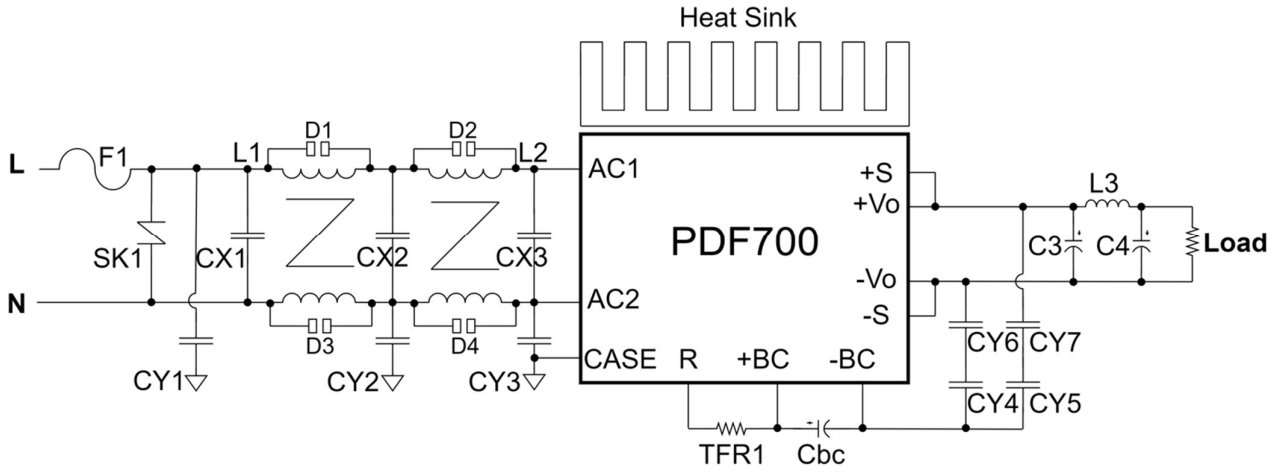

	EN 55032 Class A				
	Model Number				
	PDF700S120	PDF700S240	PDF700S280	PDF700S480	PDF700S560
F1	15A 250V	15A 250V	15A 250V	15A 250V	15A 250V
SK1	Ø10 470V	Ø 10 470V	Ø 10 470V	Ø 10 470V	Ø 10 470V
D1, D2 D3, D4	200V/3000A	200V/3000A	200V/3000A	200V/3000A	200V/3000A
CX1, CX2, CX3	2.2uF/275V	2.2uF/275V	2.2uF/275V	2.2uF/275V	2.2uF/275V
C3	1200uF/16V×7 parallel	1000uF/35V×7 parallel	1000uF/35V×7 parallel	470uF/63V×4 & 270uF/63V×3 parallel	470uF/63V×4 & 270uF/63V×3 parallel
C4	2200uF/16V	1000uF/35V	1000uF/35V	390uF/63V	390uF/63V
Cbc	220uF/450V×4 parallel	220uF/450V×4 parallel	220uF/450V×4 parallel	220uF/450V×4 parallel	220uF/450V×4 parallel
CY1	1000pF/400VAC	1000pF/400VAC	1000pF/400VAC	1000pF/400VAC	1000pF/400VAC
CY2	4700pF/400VAC	4700pF/400VAC	4700pF/400VAC	4700pF/400VAC	4700pF/400VAC
CY3, CY4, CY5, CY6, CY7	470pF/400VAC	470pF/400VAC	470pF/400VAC	470pF/400VAC	470pF/400VAC
TFR1	10R	10R	10R	10R	10R
L1	33mH typ.	33mH typ.	33mH typ.	33mH typ.	33mH typ.
L2	6mH typ.	6mH typ.	6mH typ.	6mH typ.	6mH typ.
L3	0.06uH min.	Short	Short	Short	Short
CY1 (GND)	BEAD CORE	BEAD CORE	BEAD CORE	BEAD CORE	BEAD CORE
CY2					
CY4(-BC)					
CY5(-BC)					

Note：
CX1~CX3：X2 capacitors
C3: aluminum polymer capacitors
Cbc, C4: aluminum capacitors
CY1~CY7: Y1 ceramic capacitors
F1: Fuse 15A/250V
SK1: VARISTOR/470V (TKS TVR10471KSV) or equivalent
D1, D2, D3, D4: 200V 3000A (BRIGHTKING BK1 series) or equivalent
CX1, CX2, CX3: 2.2uF/275V (HJC MKP series) or equivalent
C3:
1200uF/16V (GEMCON GPH series) or equivalent
1000uF/35V (AISHI PV series) or equivalent
270uF/63V (AISHI PV series) or equivalent
470uF/63V (AISHI PV series) or equivalent
C4:
2200uF/16V (RUBYCON ZLH series) or equivalent
1000uF/35V (NCC KY series) or equivalent
390uF/63V (RUBYCON ZLH series) or equivalent
Cbc: 220uF/450V (RUBYCON CXW series) or equivalent
L1: COMMON CHOKE T20*12*8C/NANOCRYSTAL / φ 1.0mm/22T
L2: COMMON CHOKE T20*12*10C/R15K/ φ 1.0mm/20T
L3: INDUCTOR DIP R6*20/ φ 2.5mm/0.06uH MIN.
TFR1:
Cement resistor 10R (SET FUSE TPR5 series) or equivalent
(Life time of TFR1 is affected by watt of TFR1 and capacitance value of Cbc)
CY1: 1000pF/400VAC (TDK CD series) or equivalent
CY2: 4700pF/400VAC (TDK CD series) or equivalent
CY3, CY4, CY5, CY6, CY7: 470pF/400VAC (TDK CD series) or equivalent
CY2、CY4 (-BC)、CY5 (-BC) : BEAD CORE A6B T 3.5*3*1.2mm KING CORE
CY1 (GND): BEAD CORE N4L T3.0*1.2*1.62 ATC

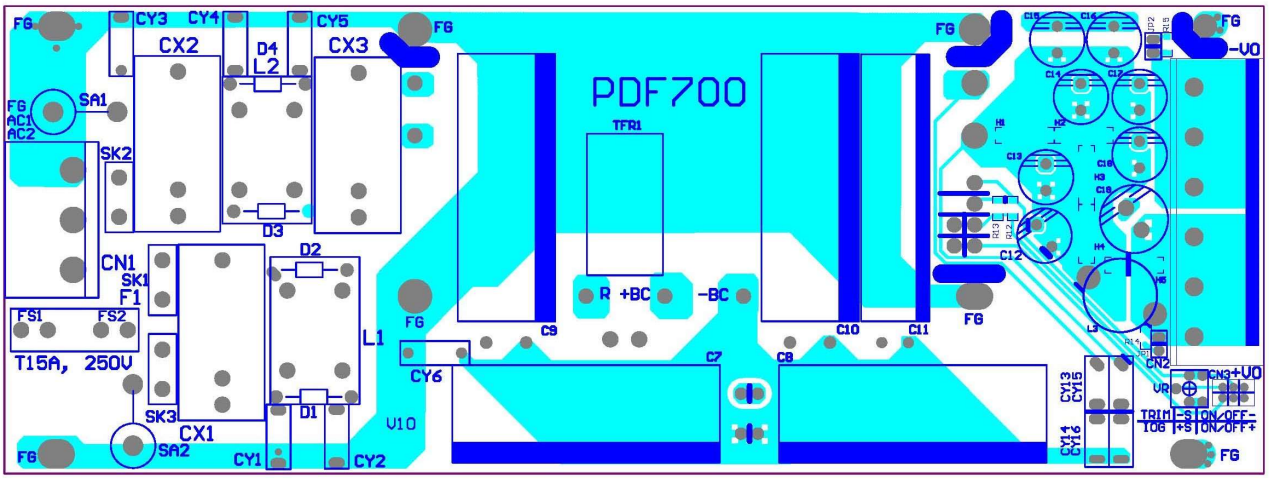

EMI test board top side

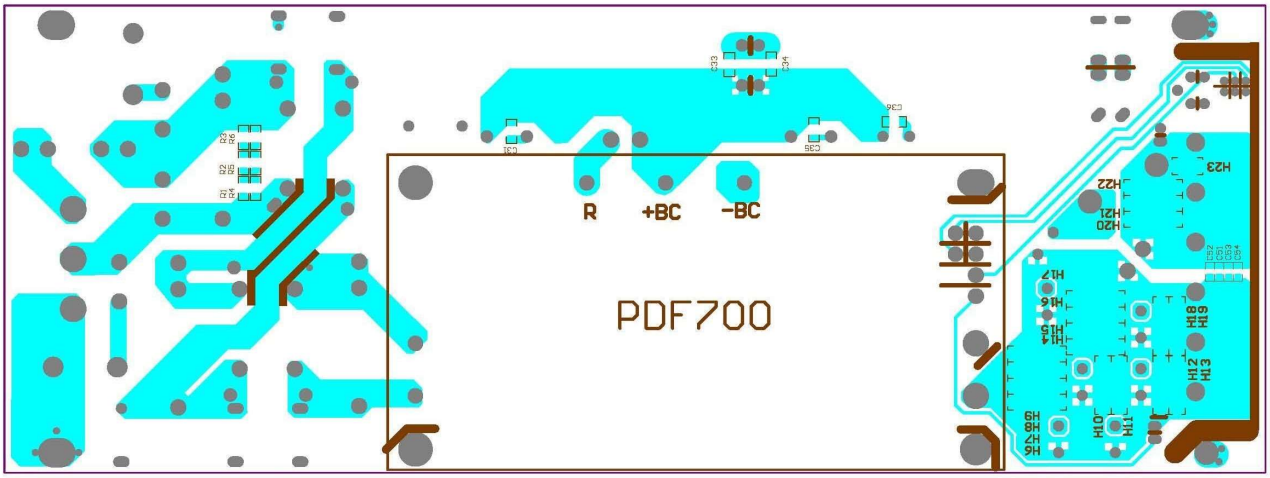

EMI test board bottom side

Note：

1. AC1/AC2/R/+BC/-BC/OFF/ON/+S/-S/IOG/TRIM：1.4mm plated through hole and 2.8mm pad size
2. +Vo/-Vo：2.4mm plated through hole and 4.8mm pad size
3. Mounting insert hole (FG) in the four corners：3.5mm plated through hole and 6mm pad size

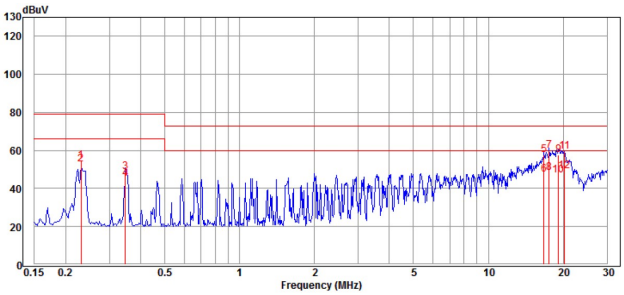

Conducted Class A of PDF700S120 Line

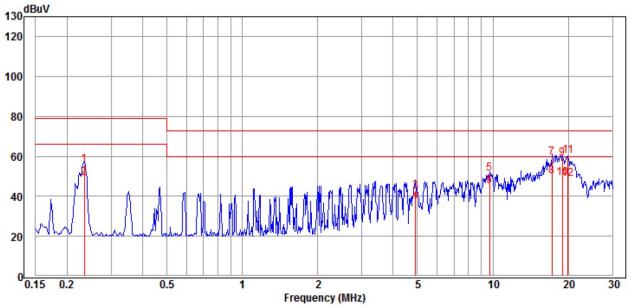

Conducted Class A of PDF700S120 Nature

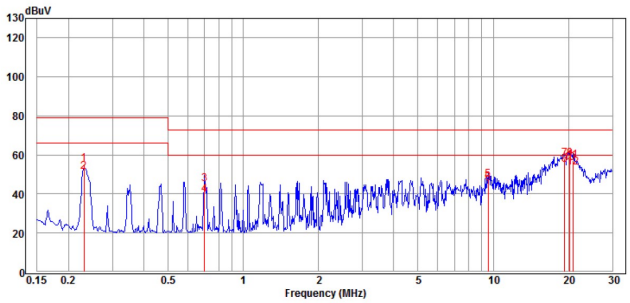

Conducted Class A of PDF700S240 Line

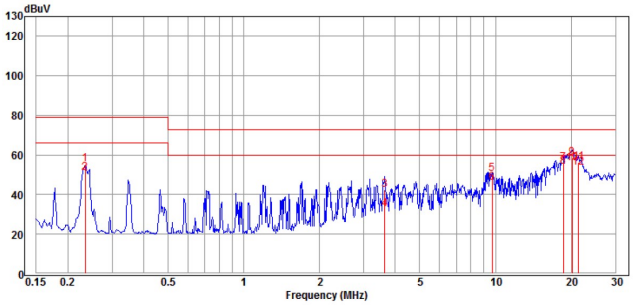

Conducted Class A of PDF700S240 Nature

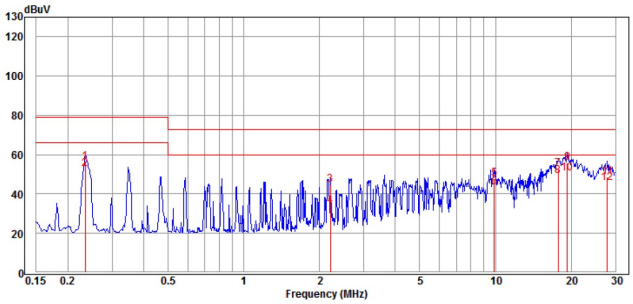

Conducted Class A of PDF700S280 Line

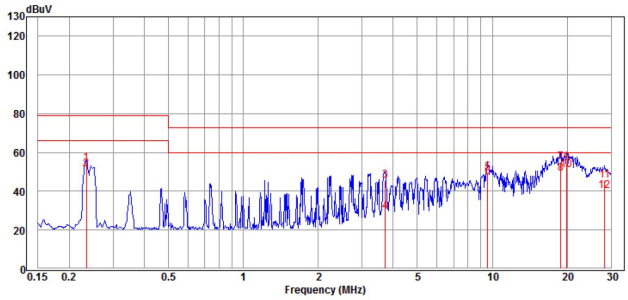

Conducted Class A of PDF700S280 Nature

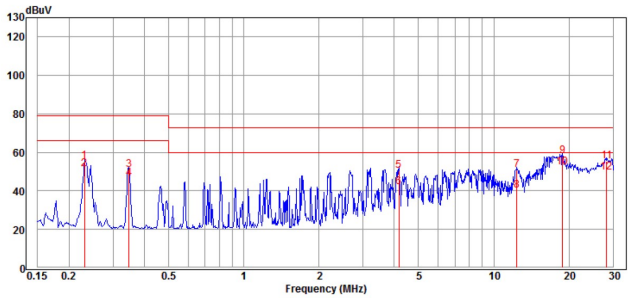

Conducted Class A of PDF700S480 Line

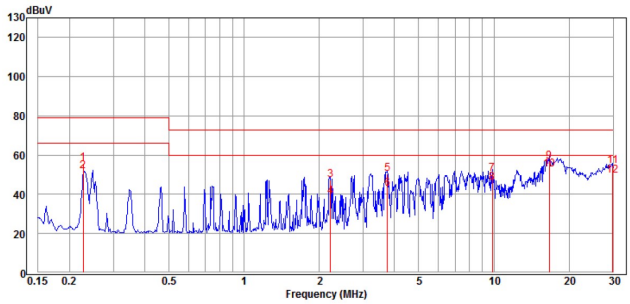

Conducted Class A of PDF700S480 Nature

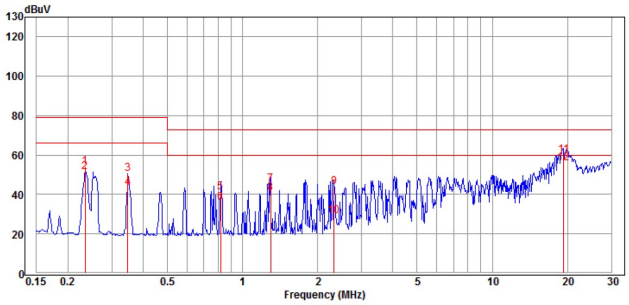

Conducted Class A of PDF700S560 Line

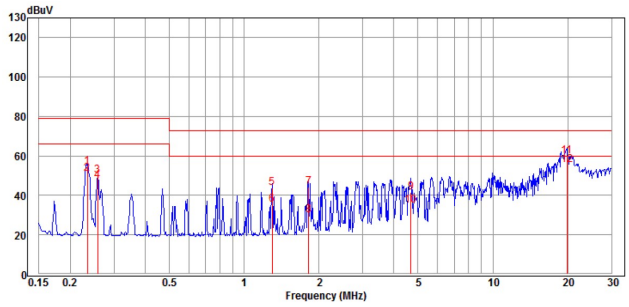

Conducted Class A of PDF700S560 Nature

9. Thermal Design

9.1 Operating Temperature Range

The highly efficient design of the PDF700S series power modules has resulted in their ability to operate within case operating temperature range from -40℃ to 100℃. Due consideration must be given to the de-rating curves when ascertaining the maximum power that can be drawn from the module. The maximum power which can be drawn is influenced by a number of factors, such as:

- Input voltage range
- Permissible output load (per derating curve)
- Forced air or natural convection
- Heat sink (optional)

9.2 Convection Requirements for Cooling

To predict the approximate cooling needed for the full brick module, refer to the power derating curves in **section 8.3**. These derating curves are approximations of the ambient temperatures and airflows required to keep the power module temperature below its maximum rating. Once the module is assembled in the actual system, the module's temperature should be monitored to ensure it does not exceed 100℃ as measured at the center of aluminum base plate.

9.3 Thermal Considerations

The power module operates in a variety of thermal environments; however, sufficient cooling should be provided to help ensure reliable operation of the unit. Heat is removed by conduction, convection, and radiation to the surrounding environment. The example is presented in **section 8.3**. The power output of the module should not be allowed to exceed rated power (V_{o_set} x $I_{o_max.}$).

9.4 Power Derating

The operating case temperature range of PDF700S series is -40℃ to +100℃. When operating the PDF700S series, proper derating or cooling is needed. The maximum case temperature under any operating condition should not exceed 100℃. The following curve is the derating curve of PDF700S series with heatsink.

Note1: Pd is calculated after 1 minute of burn-in

Note2: Maximum ambient temperature is limited at 85℃ to be considered the life time of the electrolytic capacitor.

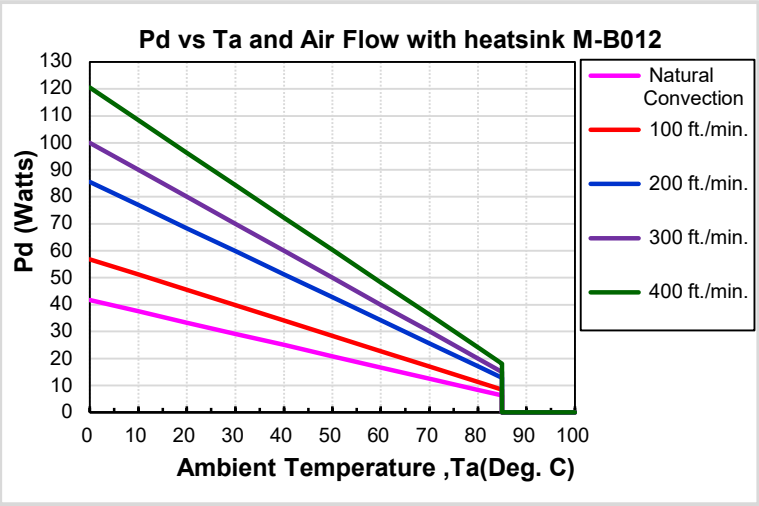

AIR FLOW RATE	TYPICAL R_{ca}
Natural Convection	2.4℃/W
100 ft./min. (0.5m/s)	1.76℃/W
200 ft./min. (1.0m/s)	1.17℃/W
300 ft./min. (1.5m/s)	1.00℃/W
400 ft./min. (2.0m/s)	0.83℃/W

Example with heat sink:

What is the minimum airflow necessary for a PDF700S120 operating at 230V $_{ac}$,, an output current of 30A, and a maximum ambient temperature of 40℃ with heatsink?

Solution:

Given:

V_{in}=230V_{ac}, V_o=12V_{dc}, I_o=30A

Determine Power dissipation (P_d):

P_d=Pi-Po=Po(1-η)/η, P_d=12V×30A×(1-0.875)/0.875=51.4Watts

Determine airflow:

Given: P_d= 51.4W and T_a=40℃

Check above Power de-rating curve: Minimum airflow=300 ft./min.

Verify:

Maximum temperature rise is $\Delta T=P_d \times R_{ca}$=51.4×1=51.4℃

Maximum case temperature is $T_c=T_a+\Delta T$=40+51.4=91.4℃< 100℃

Where:

The R_{ca} is thermal resistance from case to ambient environment.

T_a is ambient temperature and T_c is case temperature.

9.5 Full Brick Heat Sink

All Dimension In mm

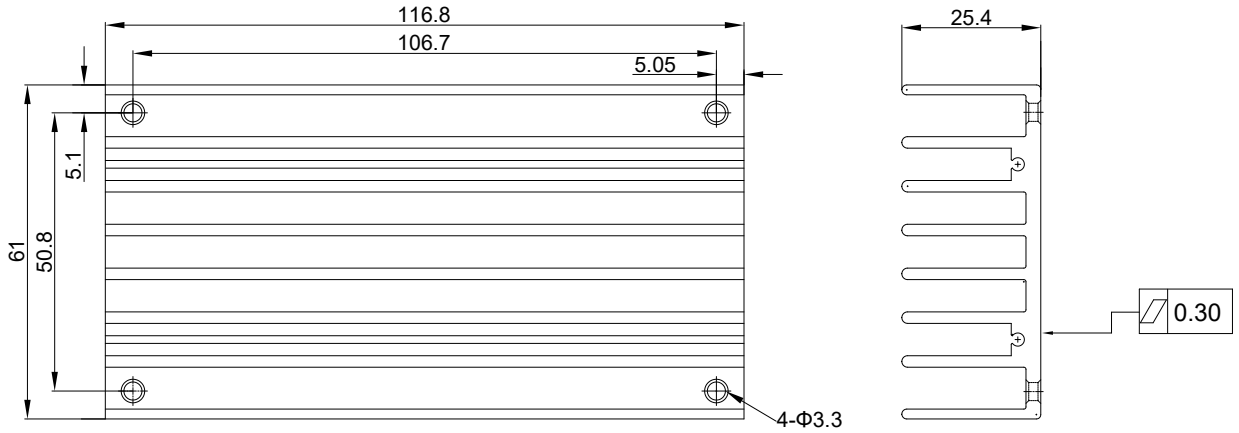

Heat Sink (Clear Mounting Inserts Φ3.3mm Through): 116.8*61*25.4 FBL254 (M-B012) G6620090204
Thermal PAD PF01: 60*115.8*0.23 (G6135041073)
Screw & Washer K308W: SMP+WS M3x8L (G75A1300322)

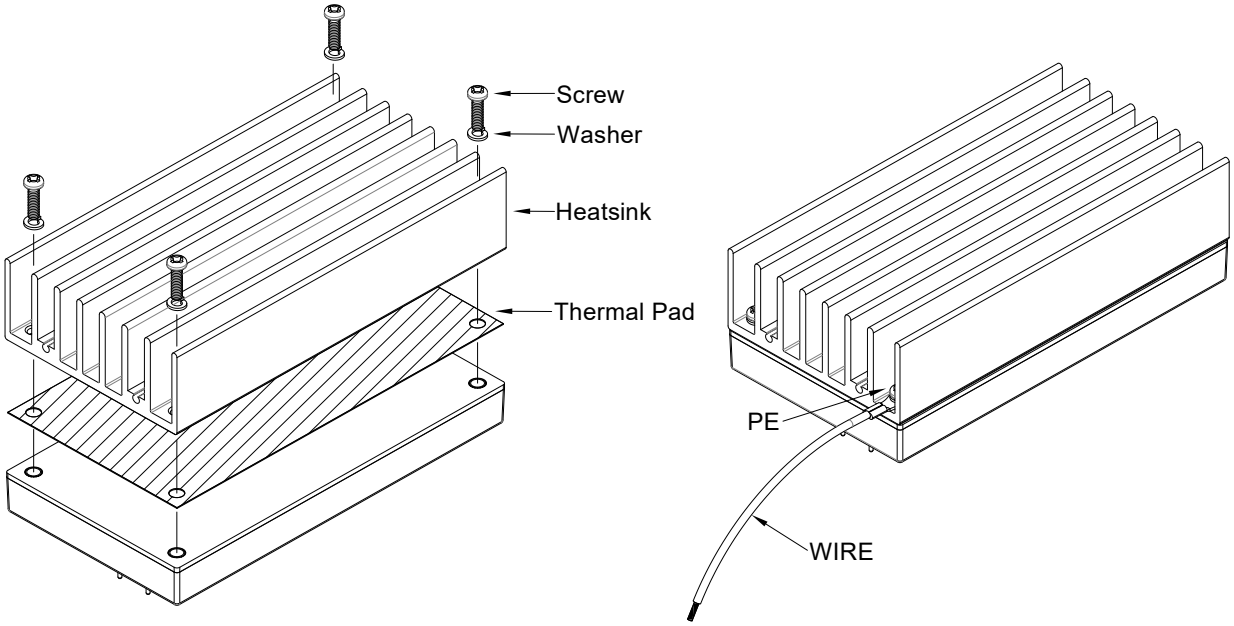

10. Packing Information

The packing information for PDF700S series is showing as follows:

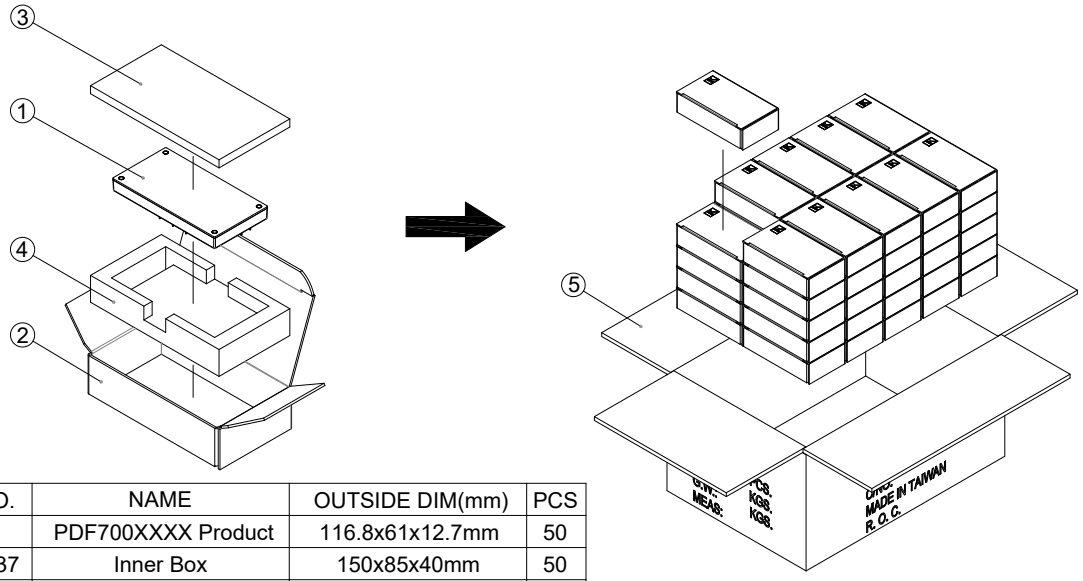

ITEM	PART NO.	NAME	OUTSIDE DIM(mm)	PCS
1		PDF700XXXX Product	116.8x61x12.7mm	50
2	G64205237	Inner Box	150x85x40mm	50
3	G64301061	Antistatic Foam	147x81x8mm	50
4	G64301064	Antistatic Foam	147x81x26.6mm	50
5	G64112340	No.67 Cardboard Box	454.5x318.2x230.3mm	1

Each Box Packaging 50 PCS Products
Gross weight Ref. 14 Kg

PDF700 50 PCS a box, including the total weight of package material about 14Kg